CHAPTER 2
STATICS OF PARTICLES

Resultant of Particles; $\sum F_x \neq 0$, $\sum F_y \neq 0$, $R \neq 0$

Equilibrium of Particles; $\sum F_x = 0$, $\sum F_y = 0$, $R = 0$

CHAPTER 3
STATICS OF RIGID BODIES

Resultant of Rigid Bodies; $\sum F_x \neq 0$, $\sum F_y \neq 0$, $\sum M \neq 0$

*Consider external forces

CHAPTER 4
EQUILIBRIUM OF RIGID BODIES

Equilibrium of Rigid Bodies; $\sum F_x = 0$, $\sum F_y = 0$, $(\sum F_z)$, $\sum M = 0$

*Consider external forces with reactions at support & connections

CHAPTER

4

EQUILIBRIUM OF RIGID BODIES

EQUILIBRIUM OF RIGID BODIES:

- Means that the body does not translate or rotate under the given loads that act on the body.

Equilibrium of Particles (Chapter 2):

$\sum F_x = 0, \sum F_y = 0$

Equilibrium of Rigid Bodies (Chapter 4):

$\sum F_x = 0, \sum F_y = 0, \sum M = 0$ → 2-D Bodies

→ 3-D Bodies

To solve a problem: 2D & 3D Bodies

1. The first step in any analysis is the creation of *free body diagram (FBD).*

- Draw the boundary of the chosen section & separate it from all other bodies.
- For a body with mass, put the weight = mg acting at the center of gravity of the body, vertically downward direction.
- Put all external forces acting on the body. (ex: tension of cable)
- Put the reactions (connections & supports) where the body touches or connected to a different rigid body.
- The FBD also should include dimensions for the process of taking moment.

Example 1:

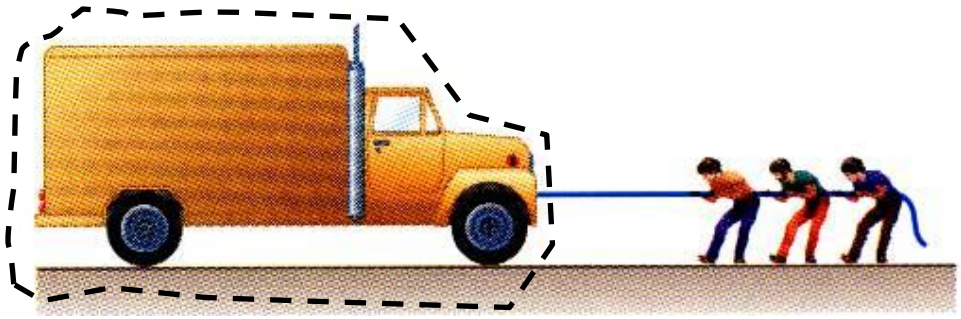

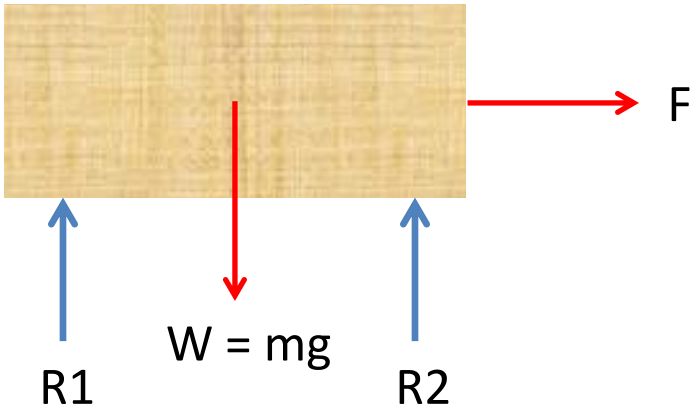

External force – Cable pulled by people

Reaction forces - Force between each wheel and the axel it is mount on.

Example 2: How to draw the free-body diagram FBD?

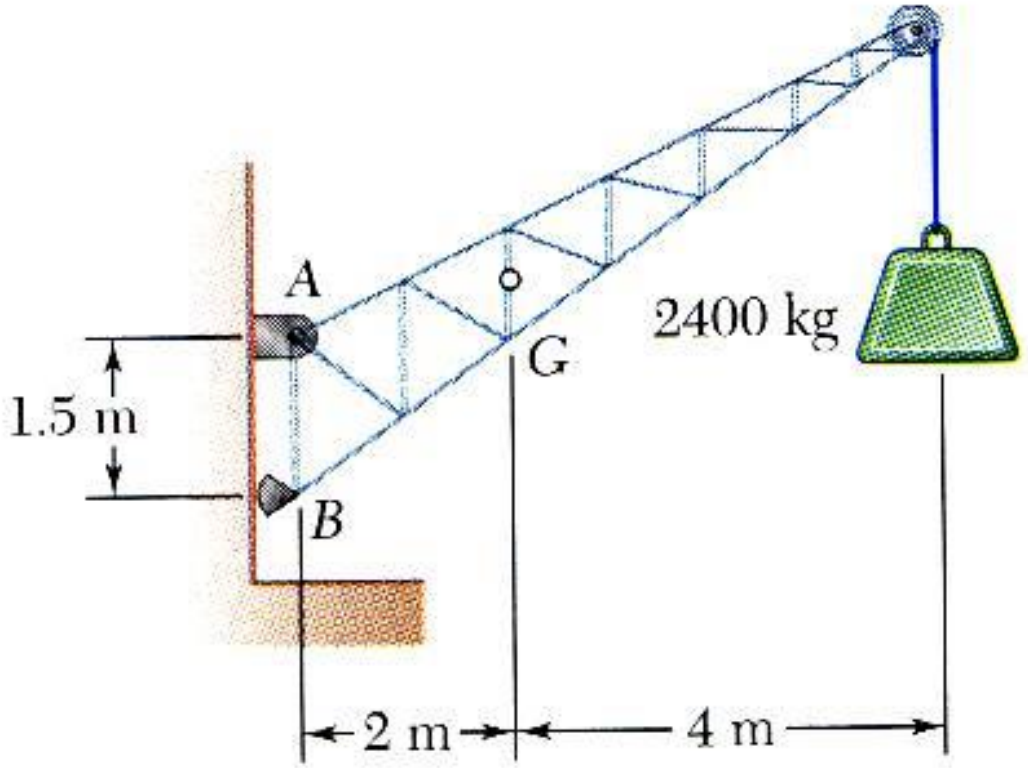

Mass = 1000kg

Reaction at Support & Connections: 2D

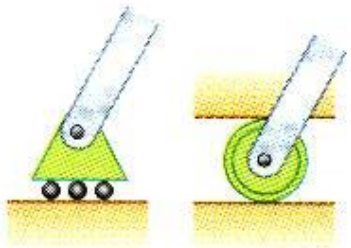 Rollers  Rocker 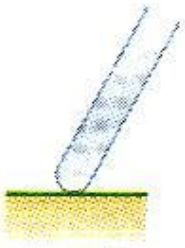 Frictionless surface	 Force with known line of action	1 Unknown: 90° to the surface
 Short cable 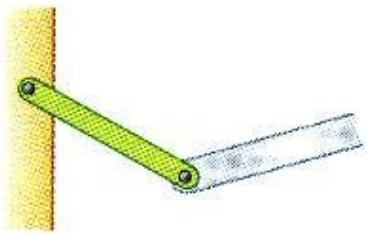 Short link	 Force with known line of action	1 Unknown: Same direction to the cable/rod
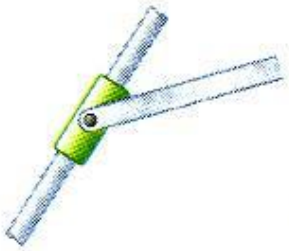 Collar on frictionless rod 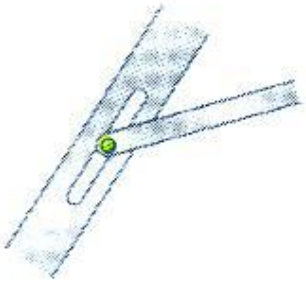 Frictionless pin in slot	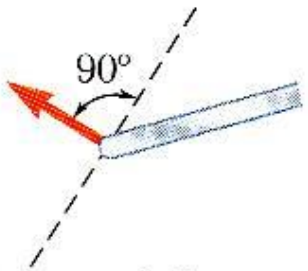 Force with known line of action	1 Unknown: 90° to the rod/slot

Reaction at Support & Connections

 Frictionless pin or hinge  Rough surface	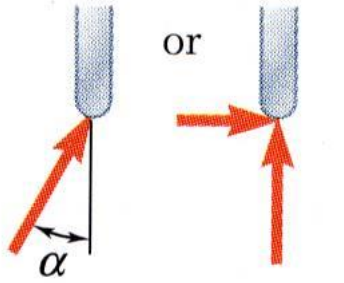 Force of unknown direction	2 Unknown: 1. 90° to the surface 2. Same line of surface
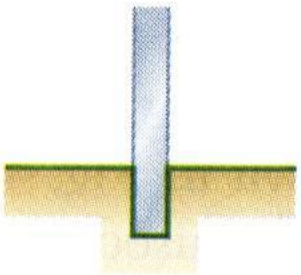 Fixed support	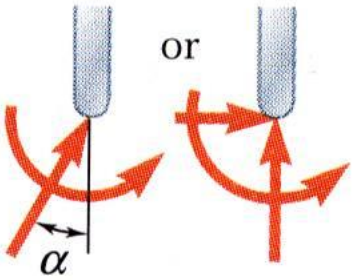 Force and couple	3 Unknown: 1. X-component (F_x) 2. Y-component (F_y) 3. Moment

Previous Example 2: FBD

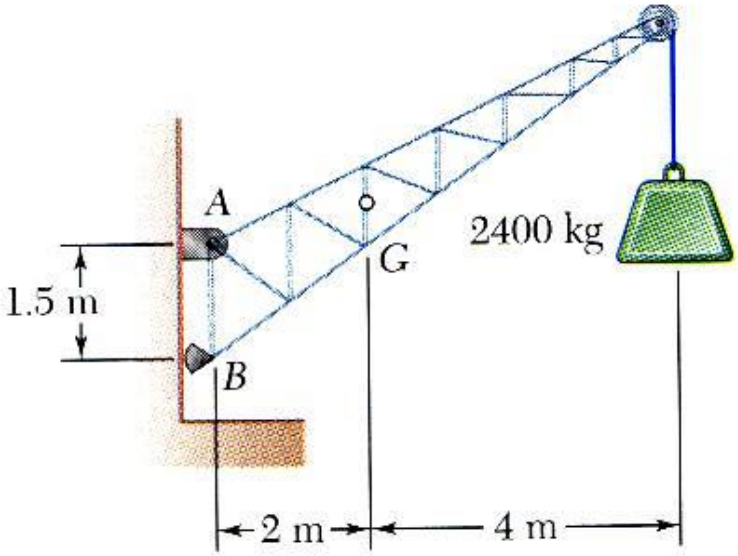

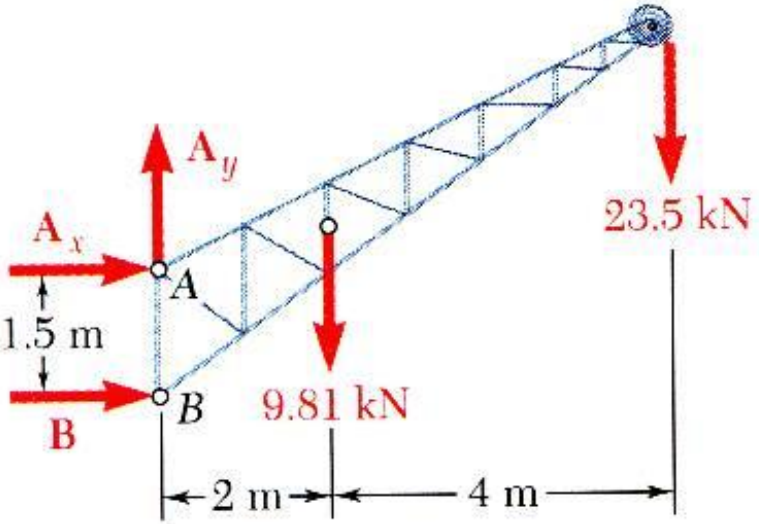

Example 3: Draw FBD

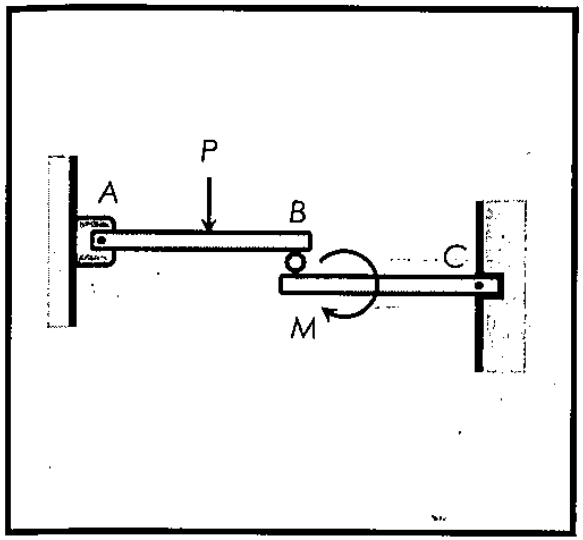

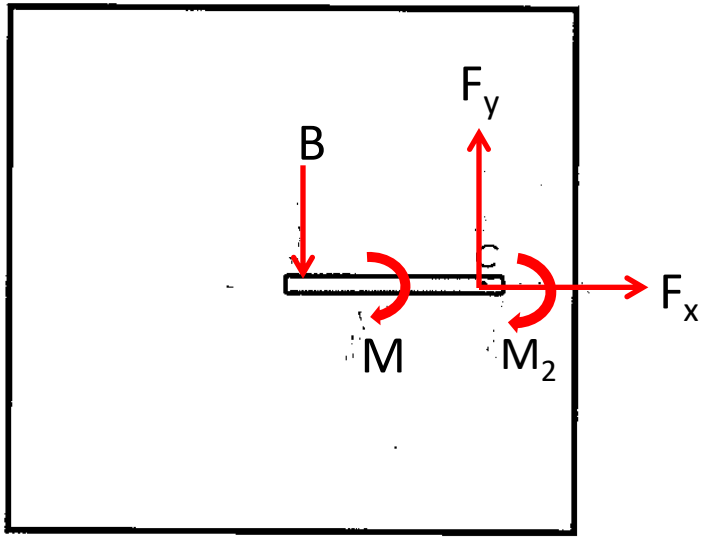

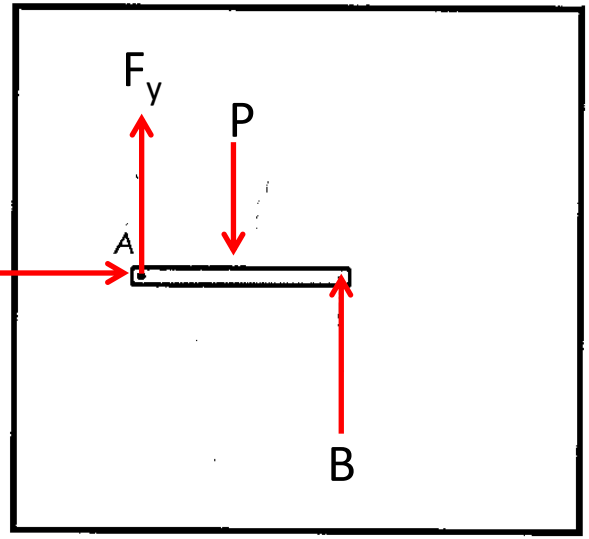

Example 4: Draw FBD

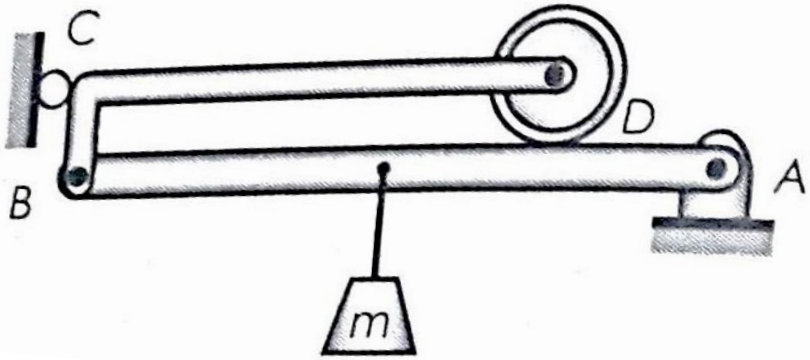

1. Draw overall FBD

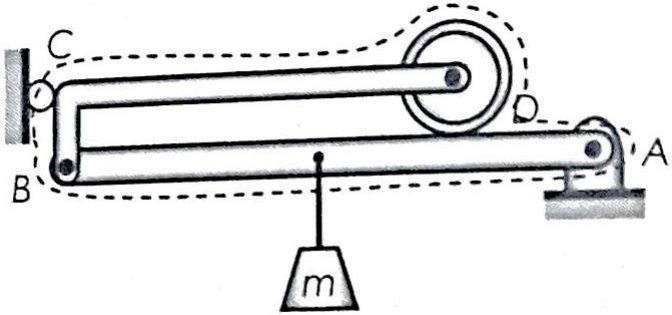

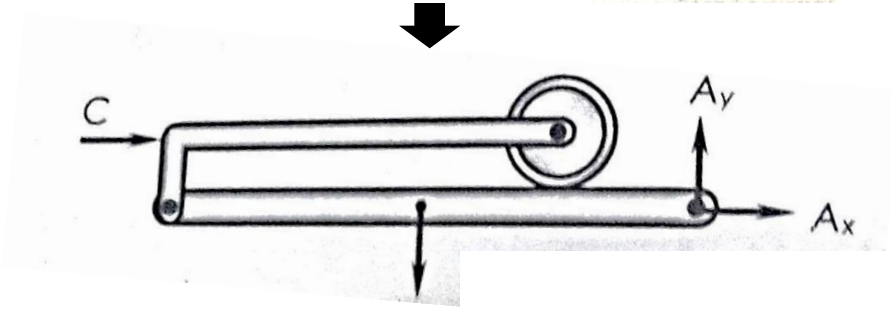

2. Draw FBD of member AB

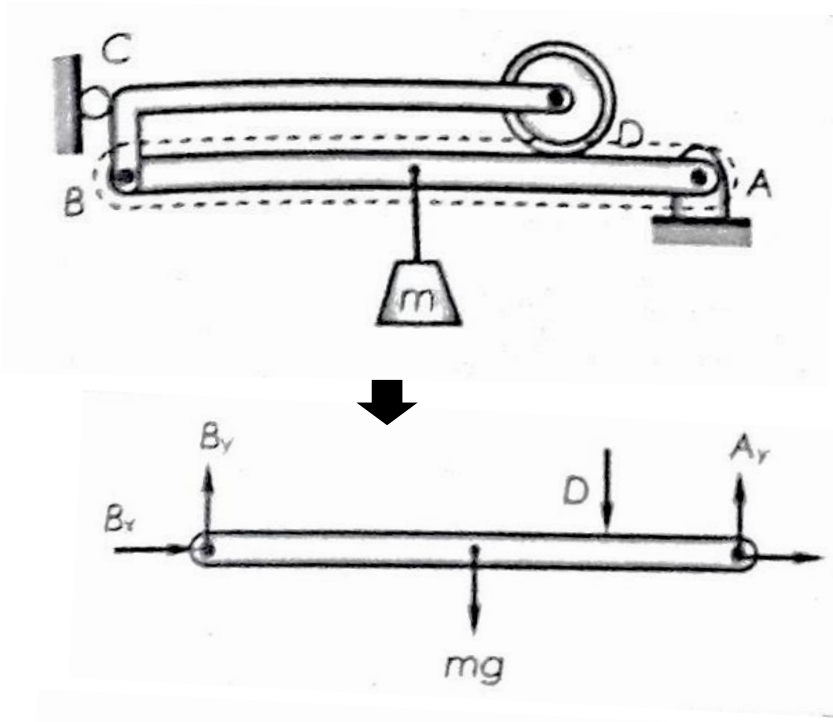

3. Draw FBD of member BCD

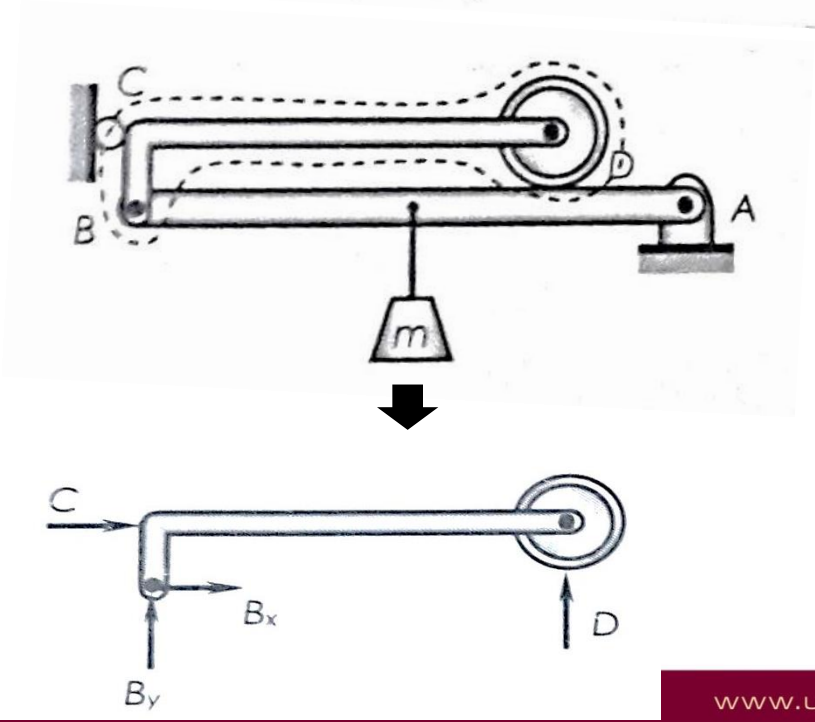

Example 5: Draw FBD

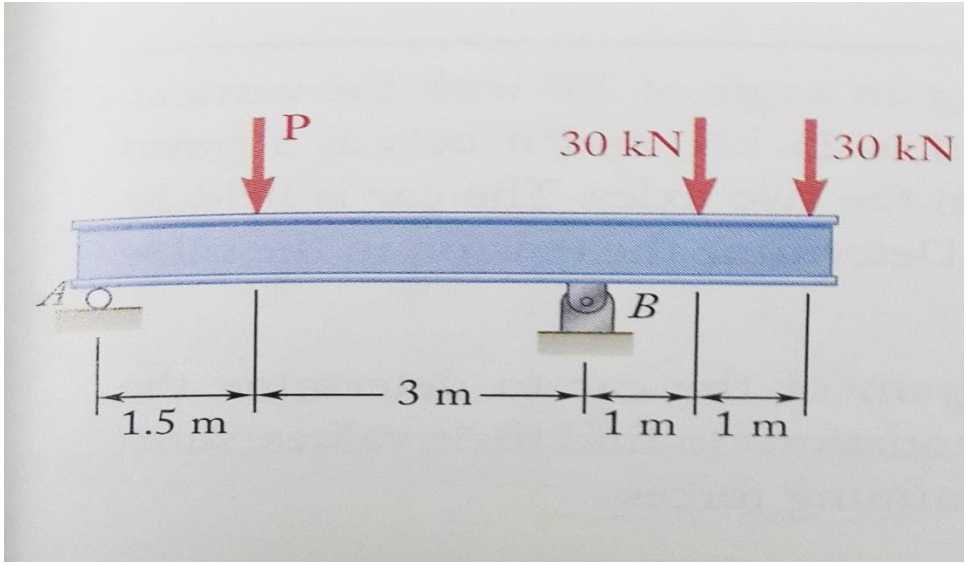

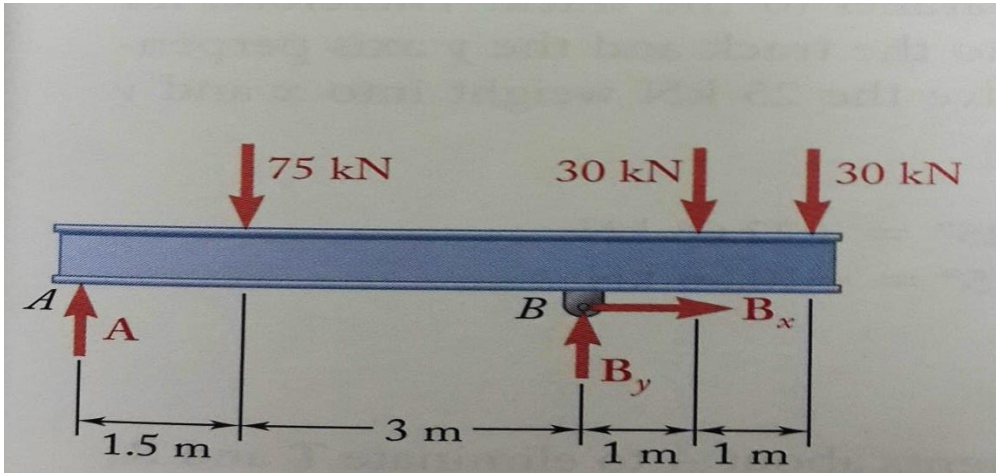

Example 6:

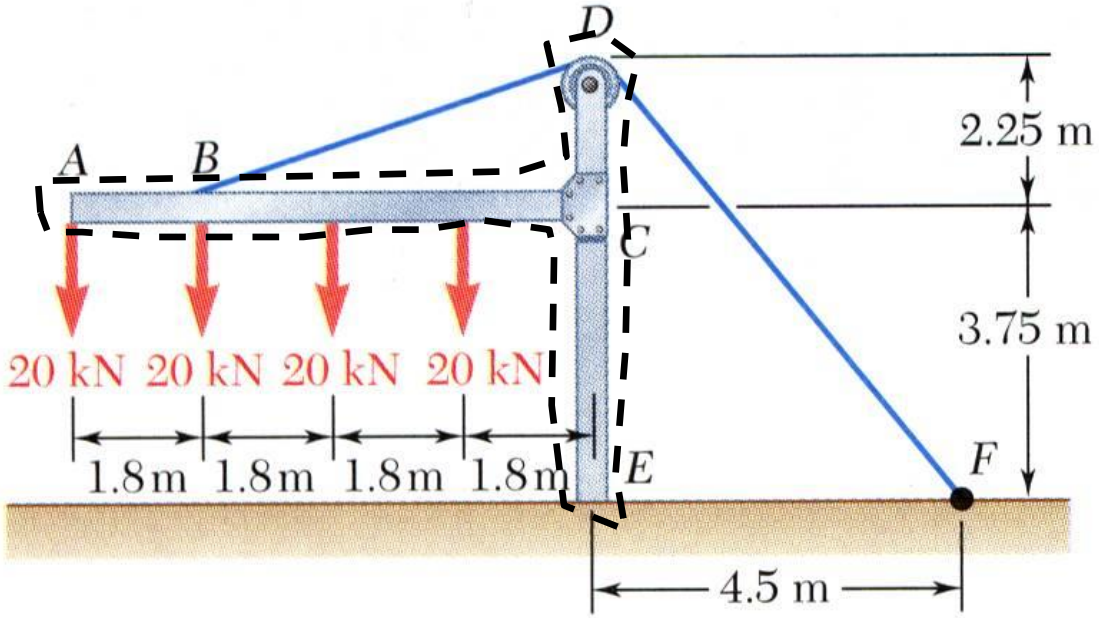

The frame shown supports part of the roof of a small building. Your goal is to draw the free body diagram (FBD) for the frame.

A

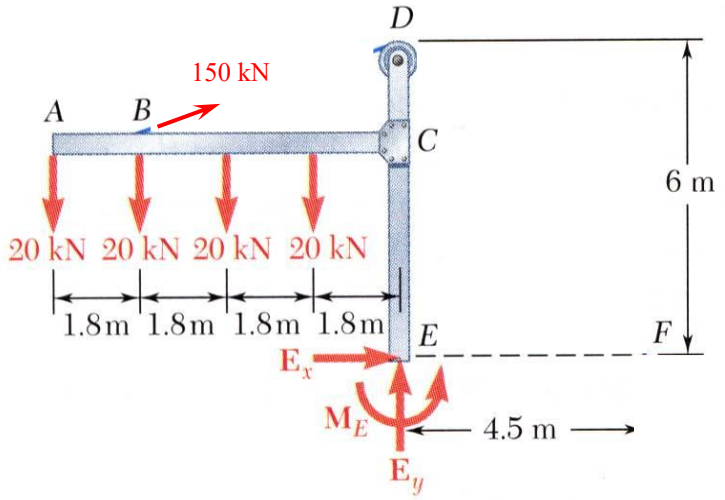

B

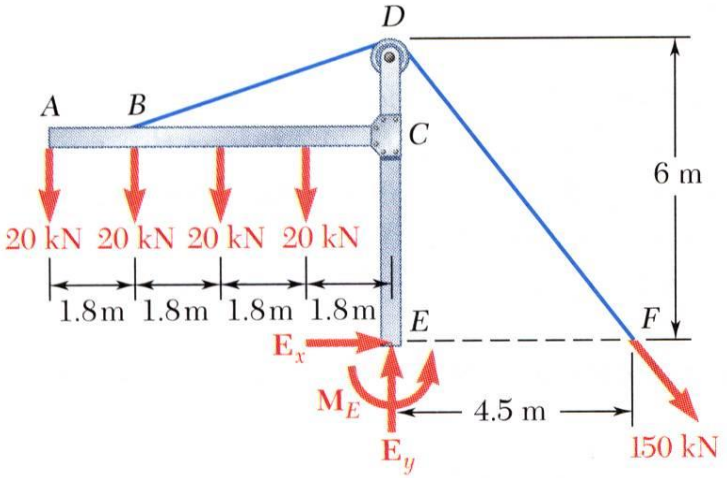

C

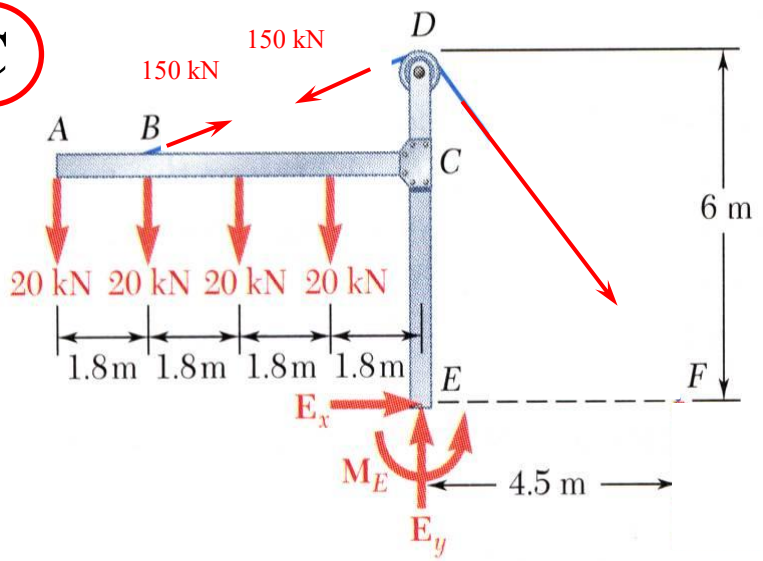

D

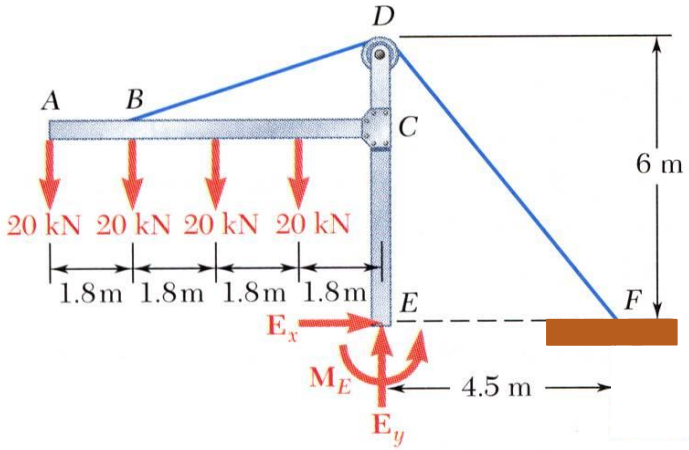

C is the most correct, though B is also correct. A & D are incorrect; why?

Example 7: Draw FBD

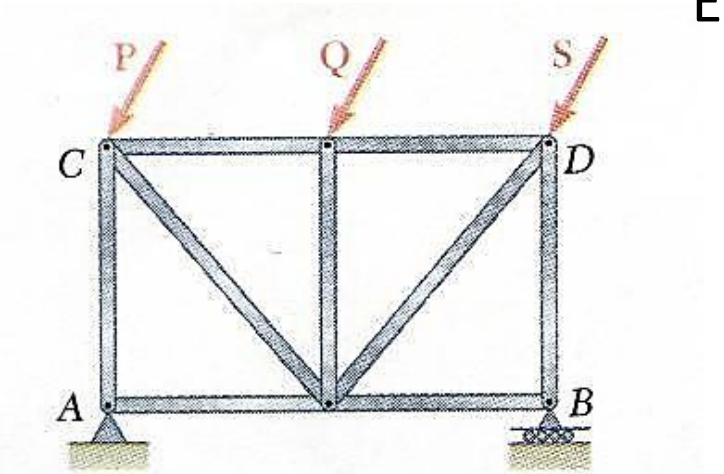

(a)

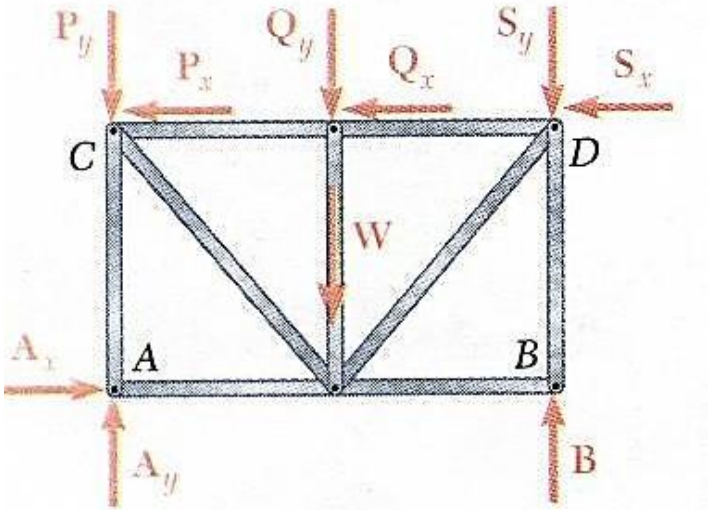

(b)

Solving Problem:

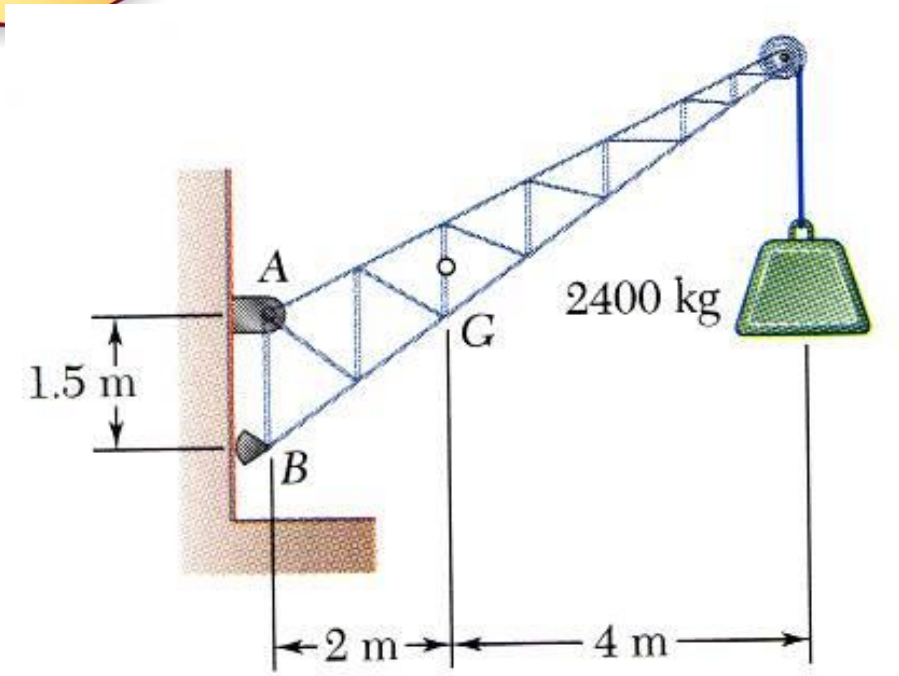

Ex. 1: A fixed crane has a mass of 1000 kg and is used to lift a 2400 kg crate. It is held in place by a pin at *A* and a rocker at *B*. The center of gravity of the crane is located at *G*.

Determine the components of the reactions at *A* and *B*.

Steps:

1. Draw FBD (Put all external & reactions on it)
2. Use $\sum M_{point} = 0$; M = Fd
3. Use $\sum F_X$ & $\sum F_y = 0$
4. Redraw FBD with new force directions

(1)

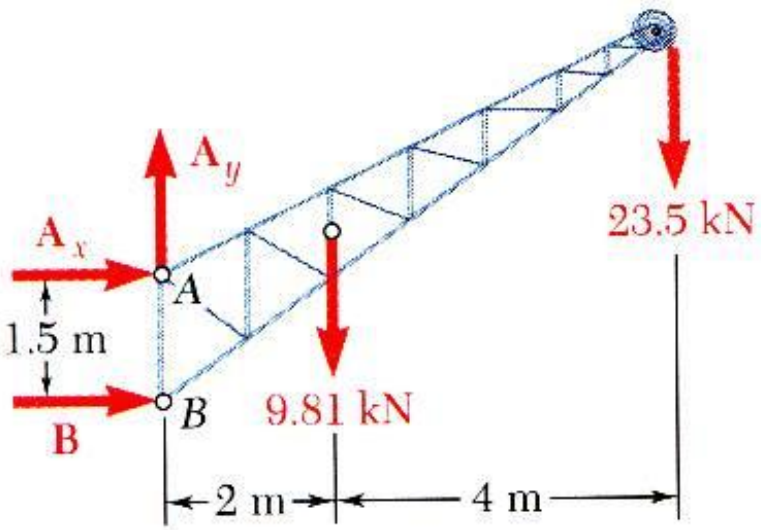

(2) Use $\sum M_A = 0$; $M = Fd$

(CCW) +ve

$\sum M_A = B_x\,(1.5m) - (9.81kN)(2m) - (23.5kN)(6m)$

$0 = B_x - 160.62kNm$

$B_x = 107.08kN\ (\longrightarrow)$

(3) Use $\sum F_x = 0$;

$(\longrightarrow)\ \sum F_x = A_x + B_x$

$0 = A_x + 107.08kN$

$A_x = -107.08kN$

$A_x = 107.08kN\ (\longleftarrow)$

Use $\sum F_y = 0$;

$(\uparrow)\ \sum F_x = A_y - 9.81 - 23.5kN$

$0 = A_y - 33.31kN$

$A_y = 33.31kN\ (\uparrow)$

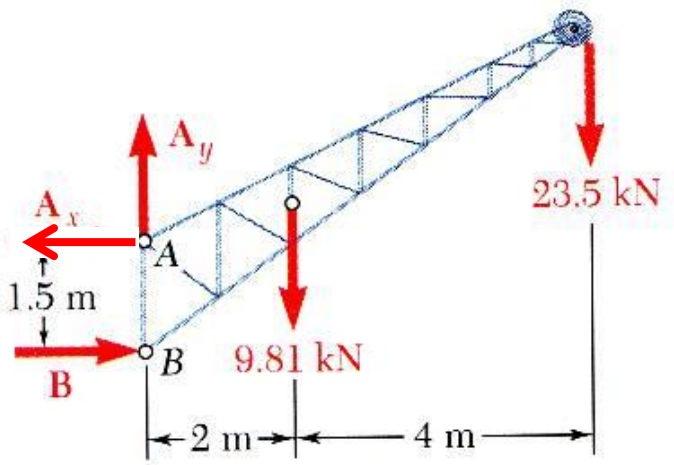

* So, $A_x = 107.08kN\ (\longleftarrow)$

$A_y = 33.31kN\ (\uparrow)$

$B_x = 107.08kN\ (\longrightarrow)$

If want to find R_A ;

$R_A^2 = \sum A_x^2 + \sum A_y^2$

$= (107.08kN)_2 + (33.31kN)_2$

$R_A = 112.14kN$

$\text{Tan } \theta = \sum Fy / \sum Fx$

$\theta = 12.28^o$

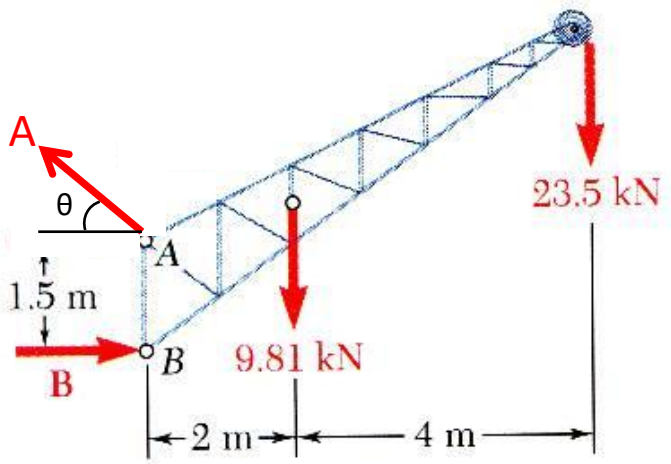

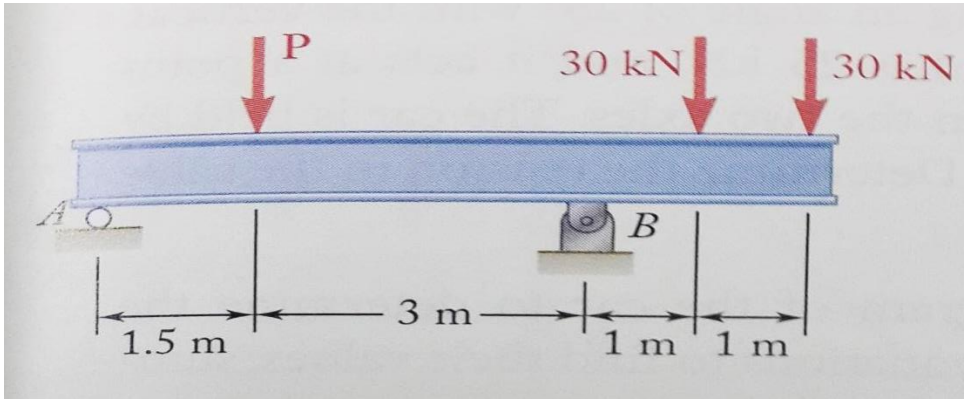

Ex 2: Three loads are applied to a beam as shown. The beam is supported by roller at A and by a pin at B. Neglecting the weight of the beam, determine the reactions at A and B when P = 75kN

(1)

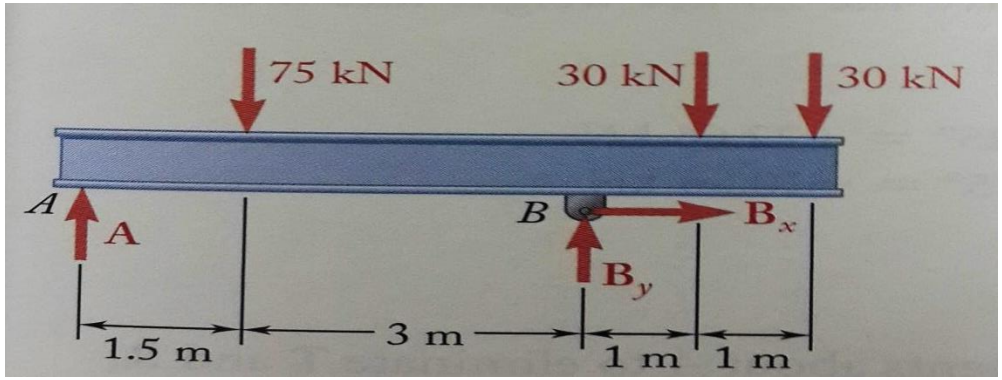

(2) Use $\sum M_B = 0$; $M = Fd$

(CCW) +ve



$$\sum M_B = - A_y (4.5m) + (75kN)(3m) - (30kN)(1m) - (30kN)(2m)$$

$$0 = -4.5m\ A_y + 135kNm$$

$$-4.5m\ A_y = 135kNm$$

$$A_y = 30kN\ (\uparrow)$$

(3) Use $\sum F_x = 0$;

$(\rightarrow)\ \sum F_x = B_x$

$$0 = B_x$$

Use $\sum F_y = 0$;

$(\uparrow)\ \sum F_y = A_y + B_y - 75kN - 30kN - 30kN$

$$0 = 30kN + B_y - 135kN$$

$$B_y = 105kN\ (\uparrow)$$

*Extra Note - Also can use $\sum M_A = 0$ to determine reaction B_y

Use $\sum M_A = 0$; $M = Fd$

+ve

$\sum M_A = -75\,(1.5\text{m}) + B_y\,(4.5\text{m}) - (30\text{kN})(5.5\text{m}) - (30\text{kN})(6.5\text{m})$

$0 = -4.5\text{m}\,B_y + 472.5\text{kNm}$

$4.5\text{m}\,B_y = 472.5\text{kNm}$

$B_y = 105\text{kN}\uparrow$ ( )

* So, $A_y = 30\text{kN}$ ($\uparrow$)

$B_x = 0$

$B_y = 105\text{kN}$ ($\uparrow$)

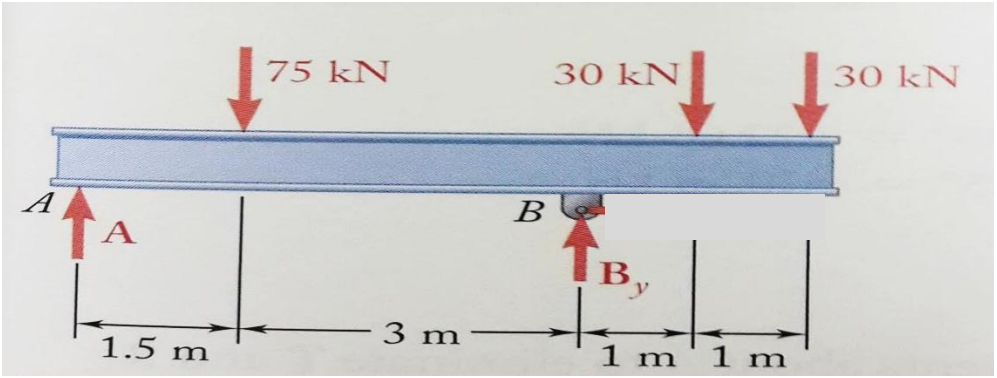

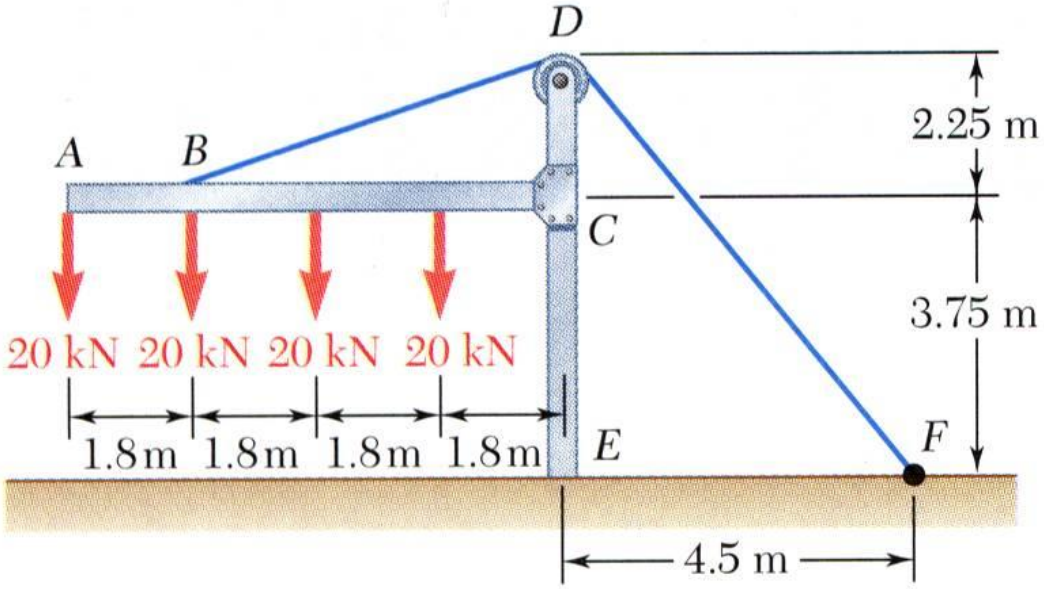

Ex 3: The frame supports part of the roof of a small building. The tension in the cable is 150 kN.

Determine the reaction at the fixed end *E*.

(1)

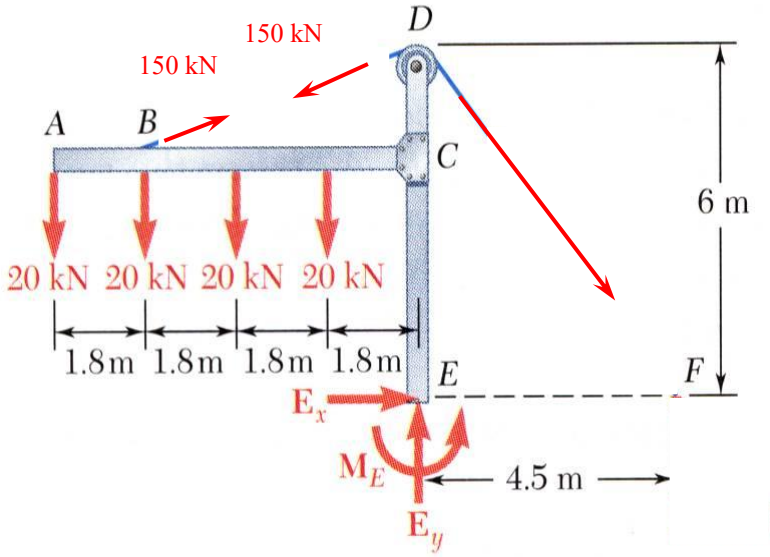
150 kN
150 kN
D
A
B
C
6 m
20 kN 20 kN 20 kN 20 kN
1.8m 1.8m 1.8m 1.8m
E
F
E_x
M_E
4.5 m
E_y

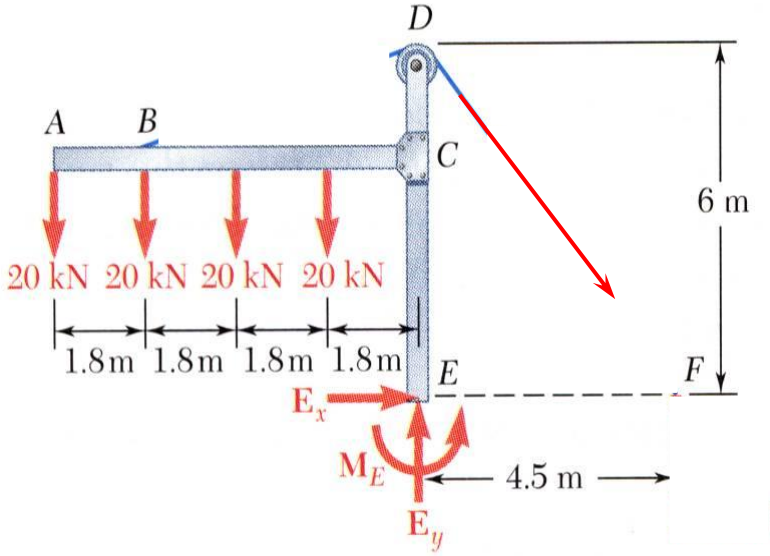
D
A
B
C
6 m
20 kN 20 kN 20 kN 20 kN
1.8m 1.8m 1.8m 1.8m
E
F
E_x
M_E
4.5 m
E_y

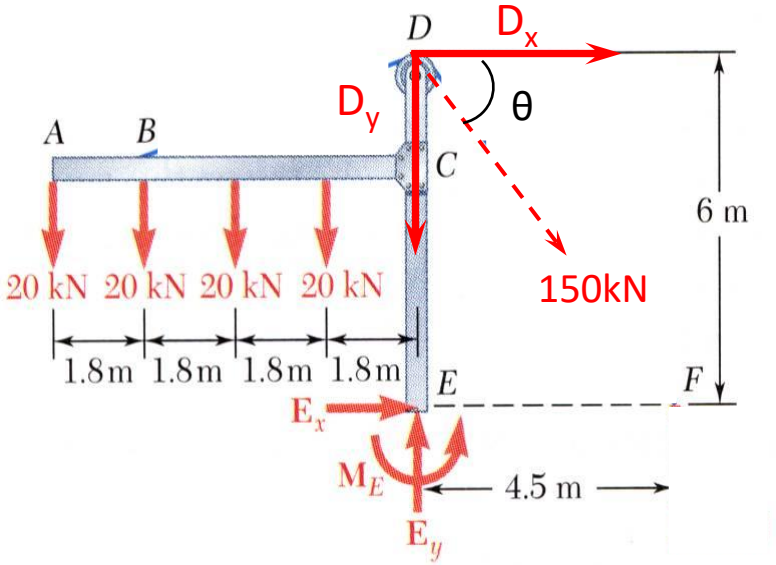

Find D_x and D_y :

Tan θ = Adjacent/ Hypothenus

Tan θ = 6m/4.5m

θ = 53.13°

Cos 53.13° = D_x /150kN

D_x =90kN (→)

Sin 53.13° = D_y /150kN

D_y =120 kN (↓)

(2) Use $\sum M_E = 0$; $M = Fd$

(CCW) +ve ↺

$$\sum M_E = 20kN(7.2m) + (20kN)(5.4m) + (20kN)(3.6m) + (20kN)(1.8m) - 90kN\,(6m) + M_E$$

$$0 = M_E - 180kNm$$

$$M_E = 180kNm\ (\circlearrowleft)$$

(3) Use $\sum F_x = 0$;

$(\rightarrow)\ \sum F_x = D_x + E_x$

$$0 = 90kN + E_x$$

$$E_x = -90kN$$

$$E_x = 90kN\ (\leftarrow)$$

Use $\sum F_y = 0$;

$(\uparrow)\ \sum F_y = -20kN(4) - 120kN + E_y$

$$0 = -200kN + E_y$$

$$E_y = 200kN\ (\uparrow)$$

* So, $E_x = 90kN\ (\leftarrow)$

$E_y = 200kN\ (\uparrow)$

$M_E = 180kNm\ (\circlearrowleft)$

Copyright © McGraw-Hill Education. Permission required for reproduction or display.



©McGraw-Hill Education/Photos by Lucinda Dowell

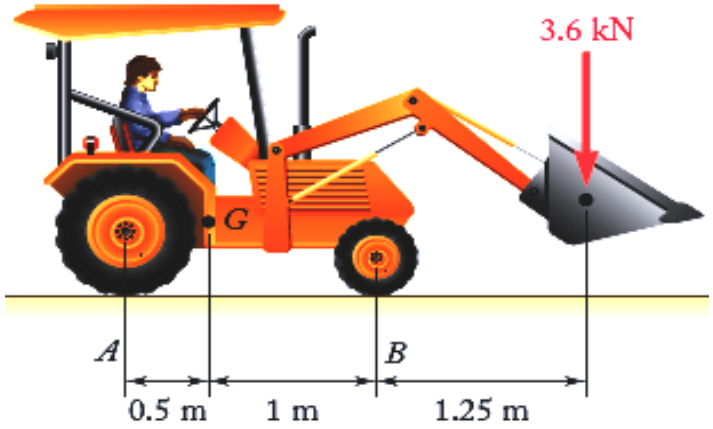

Ex. 4: A 8.4kN tractor is used to lift 3.6kN of gravel. Determine the reaction at each of the two rear wheels and two front wheels

Answer:
Rear wheels = 2.6kN or 1.3kN for each
Front wheel = 9.4kg or 4.7kN for each

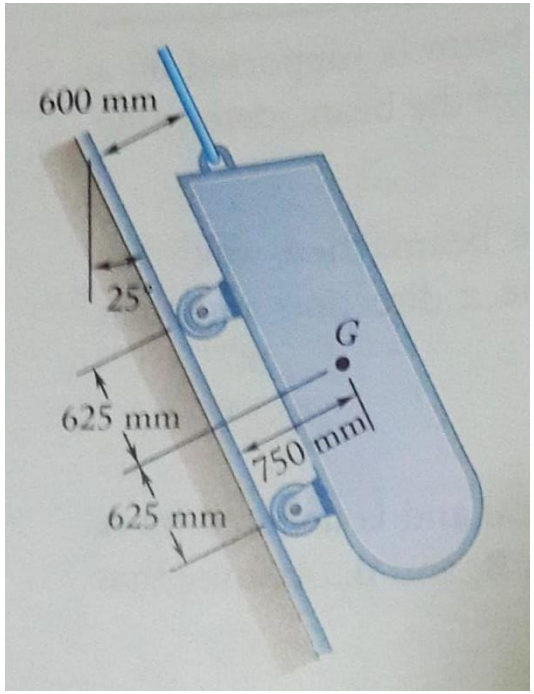

Ex 5: A loading car is at track forming an angle of 25° with the vertical. The gross weight of the car and its load is 25kN and it acts at a point 0.75m from the track, halfway between the two axles. The cars is held by a cable attached 0.6m from the track. Determine the tension in the cable and the reaction at each pair of wheels.

Reaction at Support & Connections: 3D

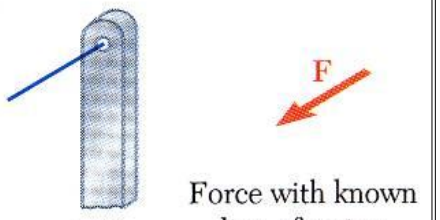

Cable

Force with known line of action (one unknown)

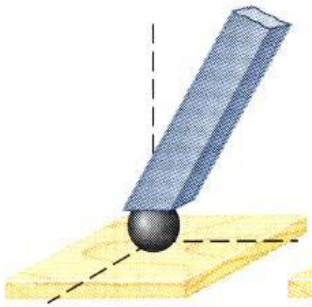

Ball

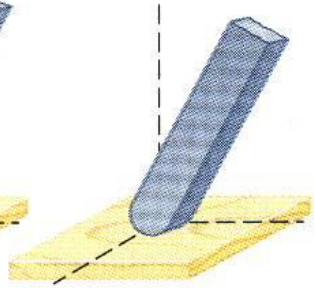

Frictionless surface

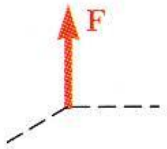

Force with known line of action (one unknown)

1 Unknown: (Force)

90° to the surface

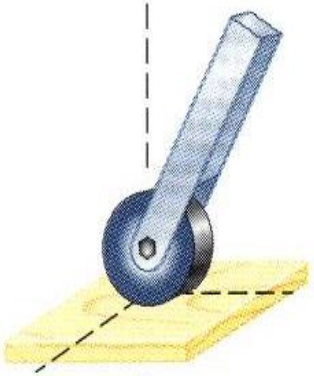

Roller on rough surface

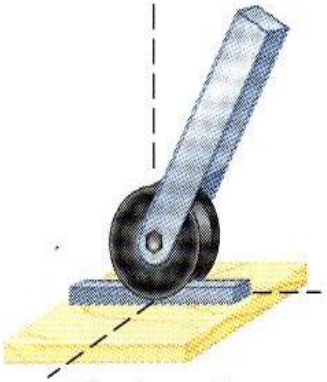

Wheel on rail

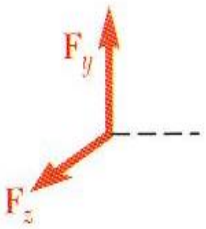

Two force components

2 Unknown:

Force perpendicular & tangent to the surface, (preventing translation in 2 directions)

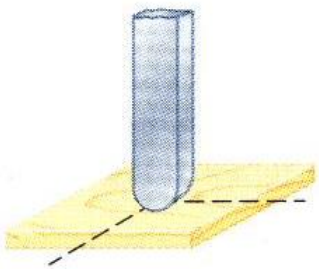

Rough surface

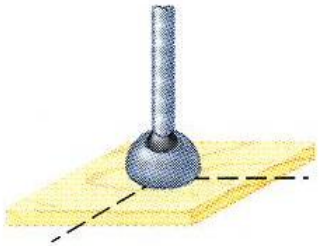

Ball and socket

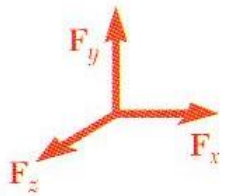

Three force components

3 Unknown:
(Forces)

90° at point of contact

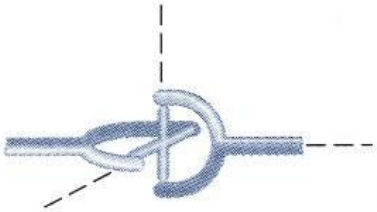

Universal joint

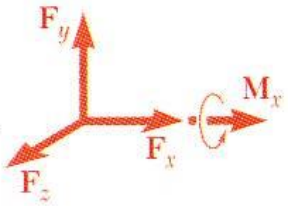

Three force components and one couple

4 Unknown:

3 component forces. Universal joint is designed to allow rotation about 2 axis



Fixed support

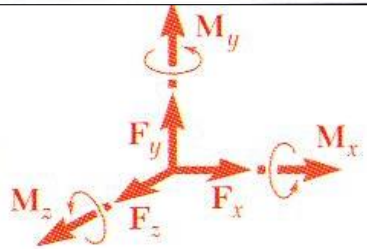

Three force components and three couples

6 Unknown:

3 component forces & 3 component moments

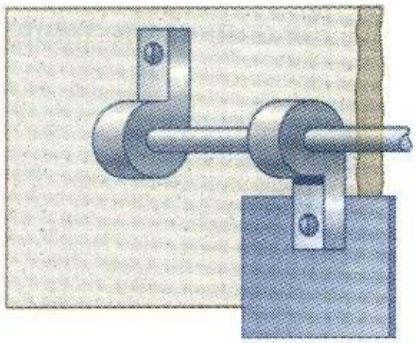

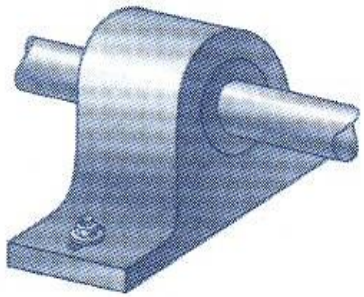

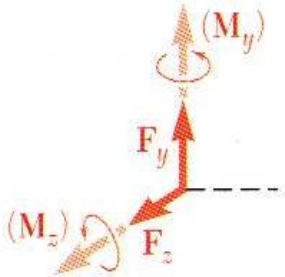

Hinge and bearing supporting radial load only

Two force components
(and two couples)

4 Unknown:

Is designed to prevent translation in 2 directions & include 2 couples

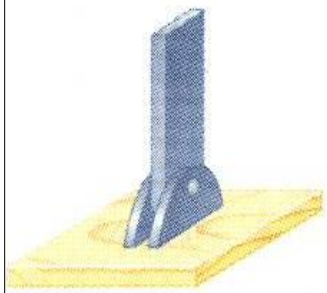

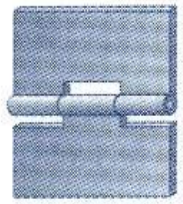

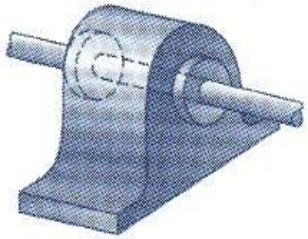

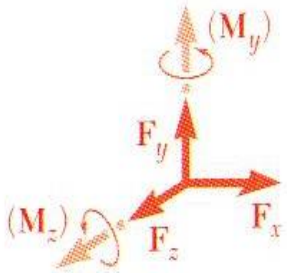

Pin and bracket

Hinge and bearing supporting
axial thrust and radial load

Three force components
(and two couples)

5 Unknown:

Is designed to prevent translation in 3 directions & include 2 couples

Solving Problem:

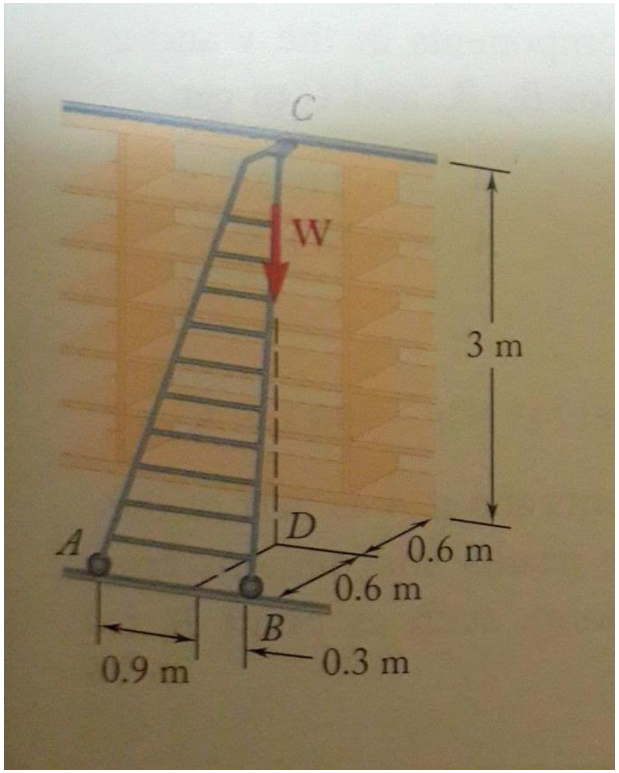

Ex.1: A 20kg ladder used to reach high shelves in a storeroom is supported by 2 flanged wheels at A and B mounted on a rail and by a flangeless at wheel C resting against a rail fixed to the wall. An 80 kg man stands on the ladder and leans to the right. The line of action of the combined weight W of the man and ladder intersects the floor at point D. Determine the reactions at A, B and C.

Steps:

1. Draw FBD (Put all external & reactions on it)
2. Use $\sum M_{point} = 0$; $M = r \times F$
3. Use $\sum F_X = \sum F_y = \sum F_z = 0$
4. Redraw FBD with new force directions

(1) FBD

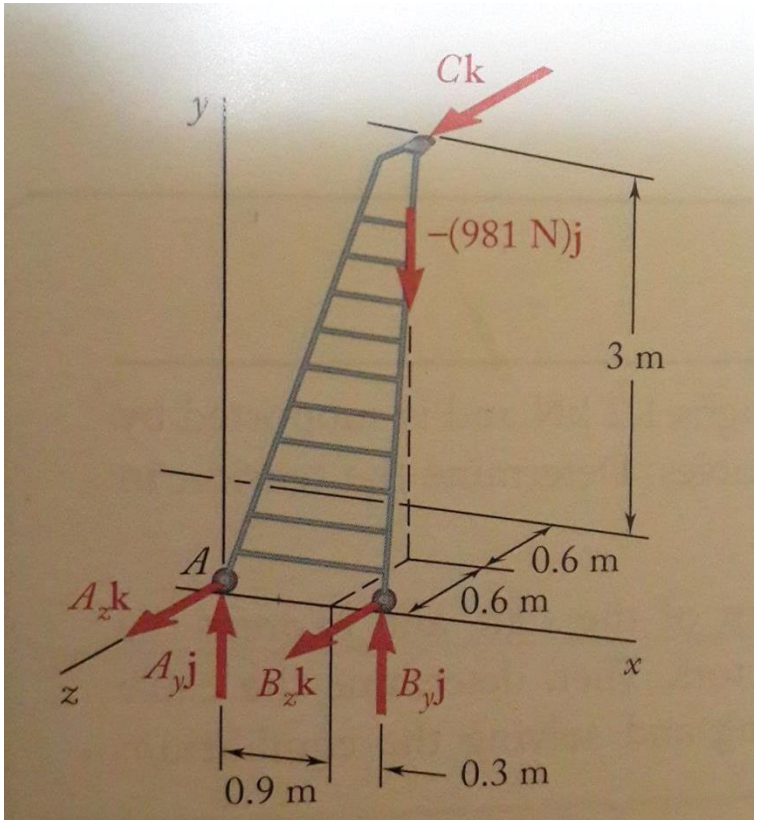

(2) Use $\sum M_A = 0$; $M = r \times F$

By reaction B;

$R_B = B_y N\, j + B_z N\, k$

$r_{AB} = 1.2\text{m}\, i$

$\sum M_{A1} = (1.2\text{m}\, i) \times (B_y\, j + B_z\, k)$

$= 1.2\, B_y\, k - 1.2\, B_z\, j$

$= -1.2\, B_z\, j + 1.2\, B_y\, k$

By force W = (20kg ladder + 80kg man) 9.81 m/s^2 ;

$W = -981\text{N}\, j$

$r_{AW} = 0.9\text{m}\, i - 0.6\text{m}\, k$

$\sum M_{A2} = (0.9\text{m}\, i - 0.6\text{m}\, k) \times (-981\text{N}\, j)$

$= -882.9\text{Nm}\, k - 588.6\text{Nm}\, i$

$= -588.6\text{Nm}\, i - 882.9\text{Nm}\, k$

By reaction C;

$R_C = C_z$

$r_{AC} = 0.6\text{m}\, i + 3\text{m}\, j - 1.2\text{m}\, k$

$\sum M_{A3} = (0.6\text{m}\, i + 3\text{m}\, j - 1.2\text{m}\, k) \times (C_z)$

$= -0.6C_z\, j + 3C_z\, i$

$= 3C_z\, i - 0.6\, C_z\, j$

$\sum M_A = 0;$

	i	*j*	*k*
M_{A1}:	0	$-1.2B_z$	$1.2B_y$
M_{A2}:	-588.6	0	-882.9
M_{A3}:	3Cz	$-0.6C_z$	0

Component *i*: $-588.6\text{Nm} + 3C_z = 0$

$C_z = 196.2\text{N}$

Component *j*: $-1.2B_z - 0.6C_z = 0$

$-1.2B_z - 0.6(196.2\text{N}) = 0$

$B_z = -98.1\text{N}$

Component *k*: $1.2B_y - 882.9\text{Nm} = 0$

$B_y = 735.75\text{N}$

(3) Use $\sum F_x = F_y = F_z = 0$;

$R_A = A_y N\, j + A_z N\, k$
$R_B = B_y N\, j + B_z N\, k$
$R_C = C_z N\, k$
$W = -981 N\, j$

	i	*j*	*k*
R_A:	0	A_y	A_z
R_B:	0	735.75	-98.1
R_C:	0	0	196.2
W:	0	-981	0

Component *j*: $A_y + 735.75N - 981N = 0$

$A_y = 245.25N$

Component *k*: $A_z - 147.15N + 196.2N = 0$

$A_z = -98.1N$

So; $R_A = 245.25N\, j - 98.1N\, k$
$R_B = 725.75N\, j - 98.1N\, k$
$R_C = 196.2N\, k$

(4) Re-draw FBD

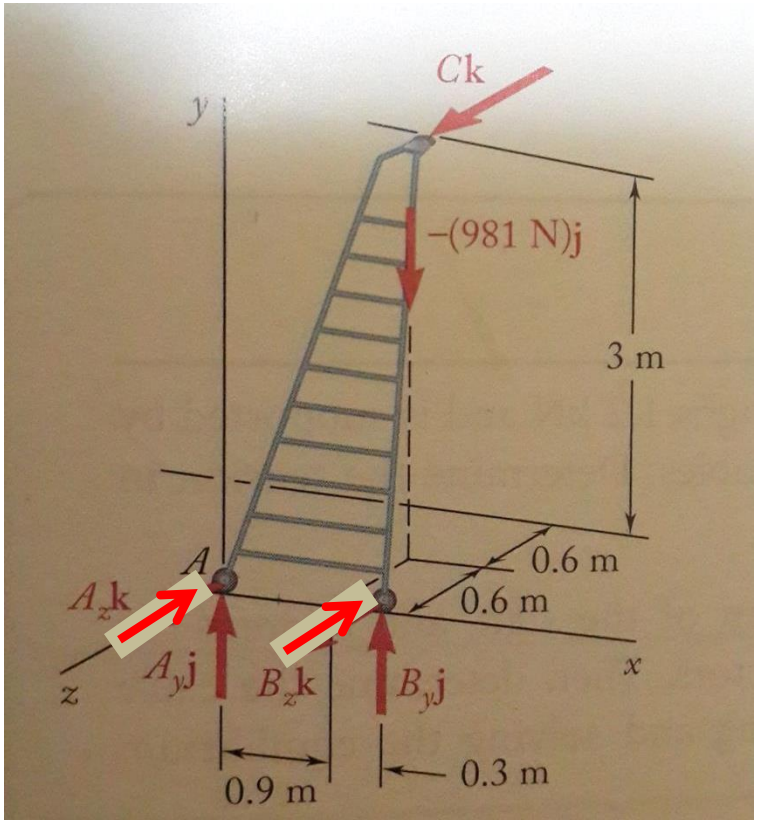

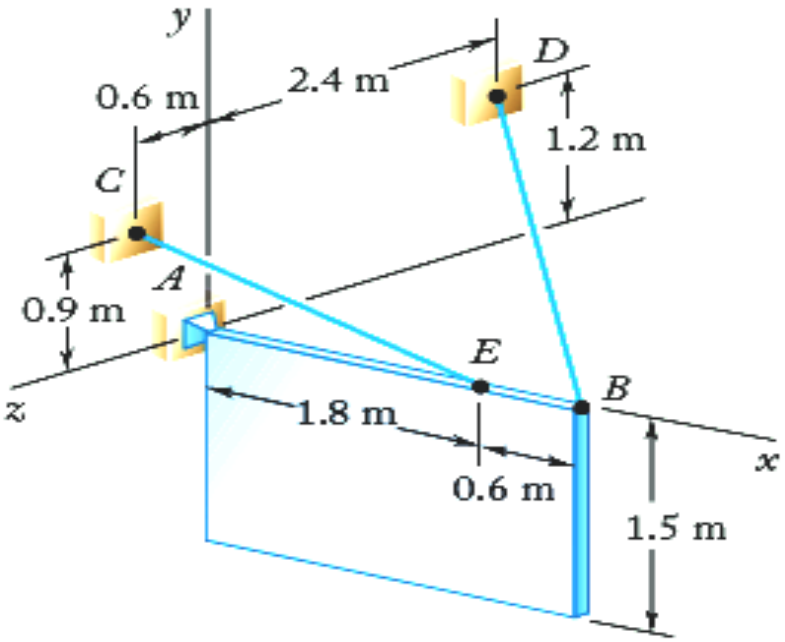

Ex. 2: A 1.5 x 2.4-m sign of uniform density weight 1.2kN and is supported by a ball-and socket joint at A and by two cables. Determine the tension in each cable and the reaction at A.

(1) FBD

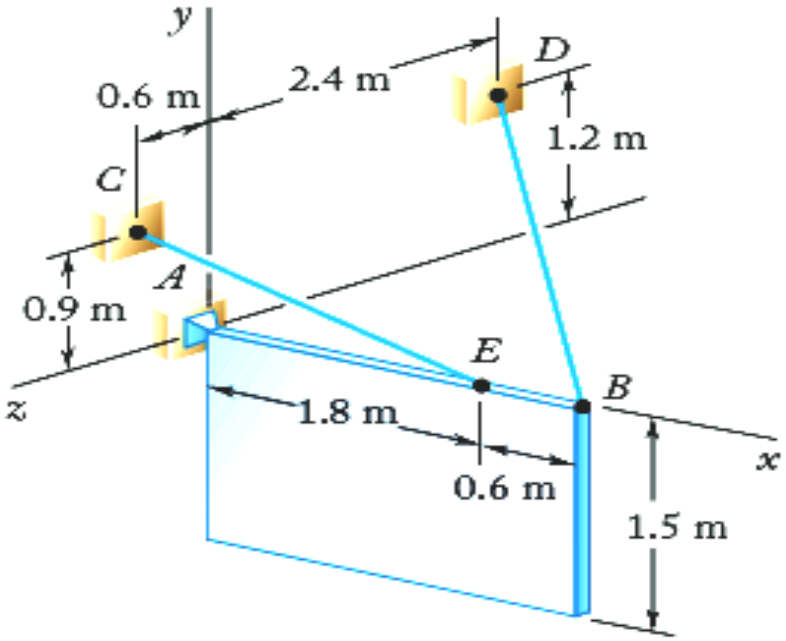

Ex. 2: A 1.5 x 2.4-m sign of uniform density weight 1.2kN and is supported by a ball-and socket joint at A and by two cables. Determine the tension in each cable and the reaction at A.

(1) FBD

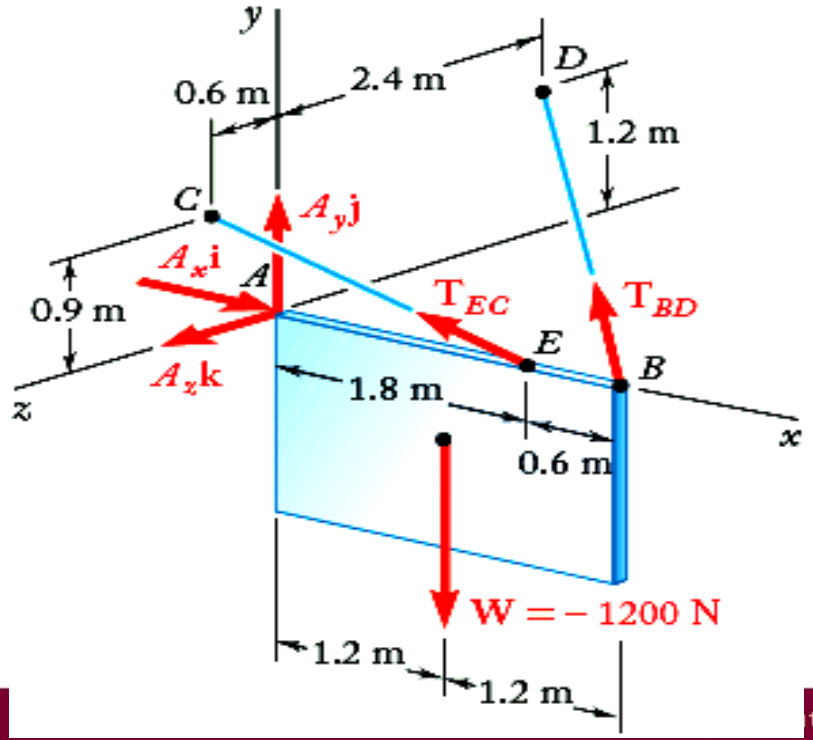

(2) Use $\sum M_A = 0$; $M = r \times F$

By tension EC;

$T_{EC} = F\,(d_x/d\,i + d_y/d\,j + d_z/d\,k)$

$= T_{EC}\,(-1.8/2.1\,i + 0.9/2.1\,j + 0.6/2.1\,k)$

$= -6/7\,T_{EC}\,i + 3/7\,T_{EC}\,j + 2/7\,k$

$r_{AE} = 1.8m\,i$

$M_{A1} = (1.8m\,i) \times (-6/7\,T_{EC}\,i + 3/7\,T_{EC}\,j + 2/7T_{EC}\,k)$

$= 27/35T_{EC}\,k + 18/35T_{EC}\,(-j)$

$= -18/35T_{EC}\,j + 27/35T_{EC}\,k$

$d_x = -1.8m$
$d_y = +0.9m$
$d_z = +0.6m$
} $d = 2.1m$

By tension BD;

$T_{BD} = T_{BD}\,(-2.4/3.6\,i + 1.2/3.6\,j - 2.4/3.6\,k)$

$= -2/3\,T_{BD}\,i + 1/3\,T_{BD}\,j - 2/3\,T_{BD}\,k$

$r_{AB} = 2.4m\,i$

$M_{A2} = (2.4m\,i) \times (-2/3\,T_{BD}\,i + 1/3\,T_{BD}\,j - 2/3\,T_{BD}\,k)$

$= 4/5\,T_{BD}\,k - 8/5T_{BD}\,(-j)$

$= 8/5T_{BD}\,j + 4/5T_{BD}\,k$

$d_x = -2.4m$
$d_y = +1.2m$
$d_z = -2.4m$
} $d = 3.6m$

(2) By W = 1200N;

$W = -1200N\ j$

$r_{AW} = 1.2m\ i$

$M_{A3} = (1.2m\ i) \times (-1200N\ j)$

$= -1440Nm\ k$

$\sum M_A = 0;$

	i	*j*	*k*
M_{A1}:	0	$-18/35T_{EC}$	$27/35T_{EC}$
M_{A2}:	0	$8/5T_{BD}$	$4/5T_{BD}$
M_{A3}:	0	0	-1440

Component *j*: $-18/35T_{EC} + 8/5T_{BD} = 0$

$T_{EC} = 28/9\ T_{BD}$

Component *k*: $27/35T_{EC} + 4/5T_{BD} - 1440 = 0$

$27/35\ (28/9T_{BD}) + 4/5T_{BD} - 1440 = 0$

T_{BD}

$= 450N$

Then, $T_{EC} = 1400N$

(3) Use $\sum F_x = F_y = F_z = 0$;

$R_A = A_x\, i + A_y N\, j + A_z N\, k$

$T_{EC} = -6/7\, T_{EC}\, i + 3/7\, T_{EC}\, j + 2/7\, T_{EC} k$

$= -1200N\, i + 600N\, j + 400N\, k$

$T_{BD} = -2/3\, T_{BD}\, i + 1/3\, T_{BD}\, j - 2/3\, T_{BD}\, k$

$= -300N\, i + 150N\, j - 300N\, k$

$W = -1200N\, j$

	i	j	k
R_A :	A_x	A_y	A_z
T_{EC} :	-1200	600	400
T_{BD} :	-300	150	-300
W:	0	-1200	0

Component i: $A_x - 1200N - 300N = 0$

$A_x = 1500N$

Component j: $A_y + 600N + 150N - 1200N = 0$

$A_y = 450N$

Component *k*: $A_z + 400N - 300N = 0$

$A_z = -100N$

So; $R_A = 1500N\ i + 450N\ j - 100N\ k$

$T_{EC} = -1200N\ i + 600N\ j + 400N\ k$

$T_{BD} = -300N\ i + 150N\ j - 300N\ k$

(4) Re-draw FBD

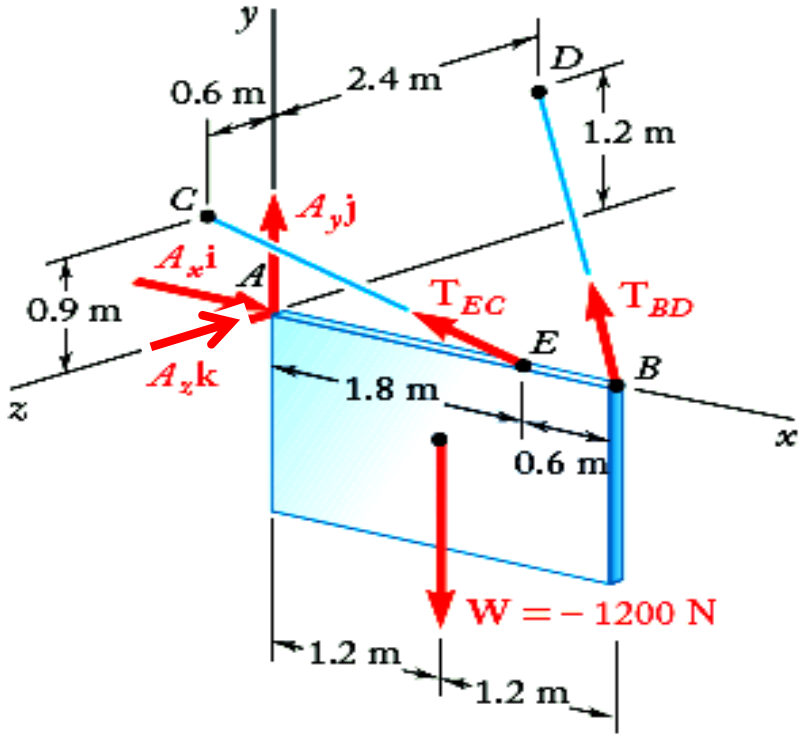

Ex. 4: A system shown in the diagram is in equilibrium. Determine the tension in cables AC and AD and the reaction at the ball and socket joint at O.

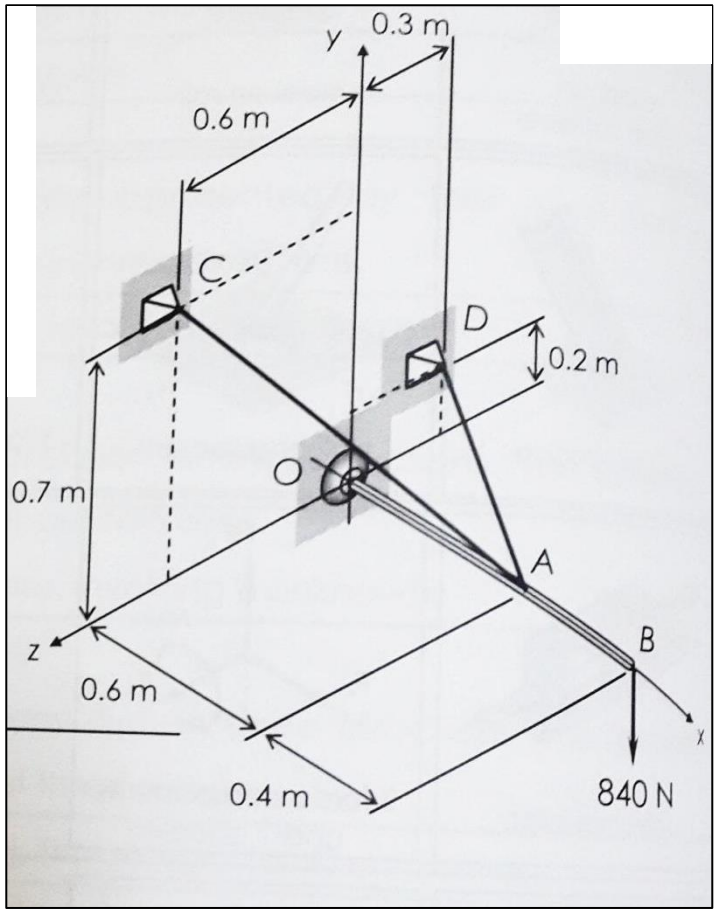

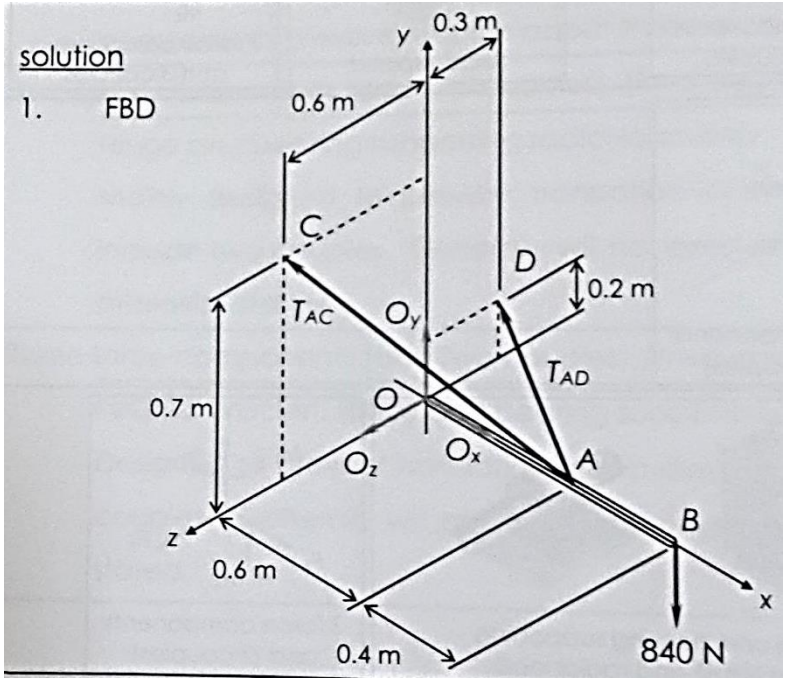

(2) Use $\sum M_O = 0$; $M = r \times F$

By tension AC;

$T_{AC} = F\,(d_x/d\,i + d_y/d\,j + d_z/d\,k)$

$= T_{AC}\,(-0.6/1.1\,i + 0.7/1.1\,j + 0.6/1.1\,k)$

$= -6/11T_{AC}\,i + 7/11T_{AC}\,j + 6/11T_{AC}\,k$

$r_{OA} = 0.6\text{m}\,i$

$M_{O1} = (0.6\text{m}\,i) \times (-6/11T_{AC}\,i + 7/11\,T_{AC}\,j + 6/11T_{AC}\,k)$

$= 21/55T_{AC}\,k + 18/55T_{AC}\,(-j)$

$= -18/55T_{AC}\,j + 21/55T_{AC}\,k$

$d_x = -0.6\text{m}$
$d_y = +0.7\text{m}$
$d_z = +0.6\text{m}$
} $d = 1.1\text{m}$

By tension AD;

$T_{AD} = T_{AD}\,(-0.6/0.7\,i + 0.2/0.7\,j - 0.3/0.7\,k)$

$= -6/7\,T_{AD}\,i + 2/7\,T_{AD}\,j - 3/7\,T_{AD}\,k$

$r_{OA} = 0.6\text{m}i$

$M_{O2} = (0.6\text{m}\,i) \times (-6/7\,T_{AD}\,i + 2/7\,T_{AD}\,j - 3/7\,T_{AD}\,k)$

$= 6/35\,T_{AD}\,k - 9/35T_{AD}\,(-j)$

$= 9/35T_{AD}\,j + 6/35T_{AD}\,k$

$d_x = -0.6\text{m}$
$d_y = +0.2\text{m}$
$d_z = -0.3\text{m}$
} $d = 0.7\text{m}$

(2) By W = 840N;

$W = -840N\ j$

$r_{AW} = 1.0m\ i$

$M_{A3} = (1.0m\ i) \times (-840N\ j)$

$= -840Nm\ k$

$\sum M_O = 0;$

	i	*j*	*k*
M_{O1}:	0	$-18/55T_{AC}$	$21/55T_{AC}$
M_{O2}:	0	$9/35T_{AD}$	$6/35T_{AD}$
M_{O3}:	0	0	-840

Component *j*: $-18/55T_{AC} + 9/35T_{AD} = 0$

$T_{AC} = 11/14T_{AD}$

Component *k:* $21/55T_{AC} + 6/35T_{AD} - 840 = 0$

$21/55\ (11/14T_{AD}) + 6/35T_{AD} - 840 = 0$

$T_{AD} = 1781.82N$

Then, $T_{AC} = 1400N$

(3) Use $\sum F_x = F_y = F_z = 0$;

$R_O = O_xN\ i + O_yN\ j + O_zN\ k$

$T_{AC} = -6/11\ T_{AC}\ i + 7/11\ T_{AC}\ j + 6/11\ T_{AC}\ k$
$= -763.64N\ i + 890.91N\ j + 763.64N\ k$

$T_{AD} = -6/7\ T_{AD}\ i + 2/7\ T_{AD}\ j - 3/7\ T_{AD}\ k$
$= -1527.27N\ i + 509.09N\ j - 763.64N\ k$

$W = -840N\ j$

	i	*j*	*k*
R_O :	O_x	O_y	O_z
T_{AC} :	-763.64	890.91	890.91
T_{AD} :	-1527.27	509.09	-763.64
W:	0	-840	0

Component *i*: $O_x - 763.64N - 1527.27N = 0$

$O_x = 2290.91N$

Component *j*: $O_y + 890.91N + 509.09N - 840N = 0$

$O_y = -560N$

Component *k*: $O_z + 890.91N - 763.64N = 0$

$O_z = -127.27N$

So; $R_O = 2290.91N\ i - 560N\ j - 127.27N\ k$

$T_{AC} = 1400N$

$T_{AD} = 1781.82N$

(4) Re-draw FBD

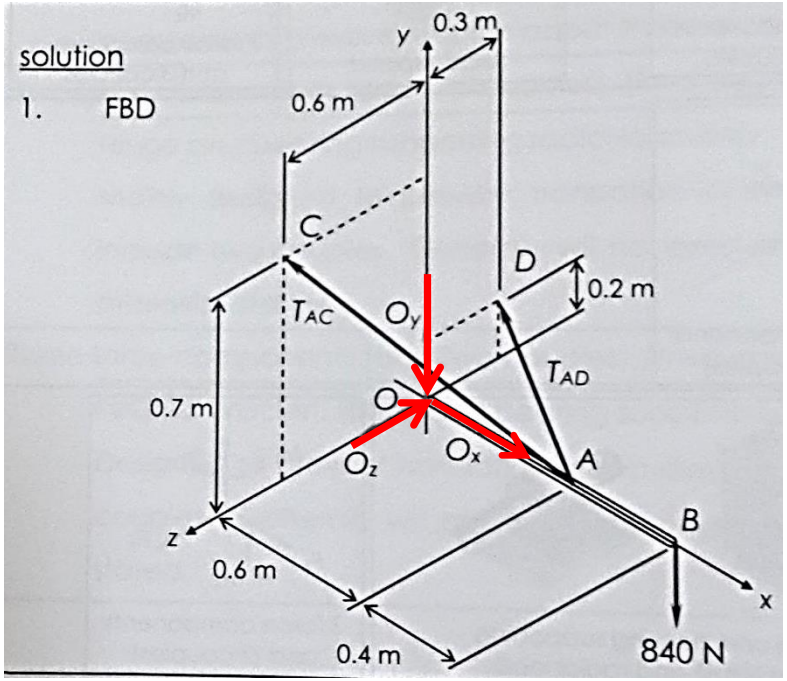

Quiz: Two loads are exerted are exerted on the bent roads OBCD, 500N at A and 1000N at D. The bent road is fixed supported at O. Determine the components of the reaction at O.

