UNIVERSITI TEKNOLOGI MALAYSIA
SSCE 1993 ENGINEERING MATHEMATICS II
TUTORIAL 3

1. Given the vector function $\mathbf{r}(t) = \sqrt{t}\,\mathbf{i} + (2t+4)\,\mathbf{j}$.

(a) Find the position vectors $\mathbf{r}(0), \mathbf{r}(1), \mathbf{r}(2)$ and draw the vectors.
(b) Sketch the graph of $\mathbf{r}(t)$ for $0 \le t \le 2$.
(c) Find the unit tangent vector when $t = 1$.

2. Draw the position vector $\mathbf{r}(t_0)$ and find $\mathbf{r}'(t_0)$ for each of the vectors below.

(a) $\mathbf{r}(t) = 3\,\mathbf{i} + t\,\mathbf{j} + (2-t^2)\,\mathbf{k},\ t_0 = 1$.
(b) $\mathbf{r}(t) = 3\,\mathbf{i} + 2\cos t\,\mathbf{j} + 2\sin t\,\mathbf{k},\ t_0 = \frac{\pi}{2}$.
(c) $\mathbf{r}(t) = \cos 2t\,\mathbf{i} - 4\sin t\,\mathbf{j},\ t_0 = \pi$.

3. Find $\mathbf{r}'(t)$ and $\mathbf{r}''(t)$ for the following vector functions.

(a) $\mathbf{r}(t) = 3\,\mathbf{i} + (t-1)\,\mathbf{j}$.
(b) $\mathbf{r}(t) = (a\cos t)\,\mathbf{i} + (b\sin t)\,\mathbf{j}$.
(c) $\mathbf{r}(\theta) = (\theta - \sin\theta)\,\mathbf{i} + (1-\cos\theta)\,\mathbf{j}$.

4. Find the velocity and the acceleration for each of the following functions representing the position vectors of the particles.

(a) $\mathbf{r}(t) = (t - \frac{3}{2})\,\mathbf{i} + 2t\,\mathbf{j}$.
(b) $\mathbf{r}(t) = e^t\,\mathbf{i} + e^{t/2}\,\mathbf{j}$.
(c) $\mathbf{r}(\theta) = (\sin\theta)\,\mathbf{i} + (\cos 2\theta)\,\mathbf{j}$.

5. Find the position vectors satisfying the following conditions.

(a) $\mathbf{r}'(t) = 4e^{2t}\,\mathbf{i} + 3e^t\,\mathbf{j},\ \mathbf{r}(0) = 2\,\mathbf{i}$.
(b) $\mathbf{a}(t) = -32\,\mathbf{j},\ \mathbf{v}(0) = 600\sqrt{3}\,\mathbf{i} + 600\,\mathbf{j},\ \mathbf{r}(0) = \mathbf{0}$.

6. Find the unit tangent vector and unit normal vector at the given point for each of the following curves.

(a) The curve $\mathbf{r}(t) = t\,\mathbf{i} + 2t^2\,\mathbf{j} - t^3\,\mathbf{k}$, at $(1, 2, -1)$.
(b) The curve $x = e^t\cos t,\ y = e^t\sin t,\ z = e^t$, at $t = 0$.
(c) The curve $x = 2\sin t,\ y = 2\cos t,\ z = 3t$, at $\left(1, \frac{1}{2}\sqrt{3}, \frac{1}{2}\pi\right)$.

7. (a) If $\mathbf{F}(t) = 3\sec t\,\mathbf{i} - t\,\mathbf{j} + \ln t\,\mathbf{k}$ and $\mathbf{G}(t) = 4t\,\mathbf{i} - \sin t\,\mathbf{k}$, find $\dfrac{d}{dt}\left[\mathbf{F}(t)\times\mathbf{G}(t)\right]$.

(b) If $\mathbf{F}(t) = 2t\,\mathbf{i} + 3t^2\,\mathbf{j} + t^3\,\mathbf{k}$ and $\mathbf{G}(t) = t^4\,\mathbf{k}$, find $\dfrac{d}{dt}\left[\mathbf{F}(t)\cdot\mathbf{G}(t)\right]$.

(c) Find $\mathbf{r}(t)$ if $\mathbf{r}'(t) = 2\,\mathbf{i} + \dfrac{t}{t^2+1}\,\mathbf{j} + t\,\mathbf{k}$ and $\mathbf{r}(1) = \mathbf{0}$.

8. (a) Show that the parametric equations of the curve of intersection between the surface $z = x^2 + 4y^2$ and the plane $z = 2x$ are

$$x = 1 + \cos t,\ y = \frac{1}{2}\sin t,\ z = 2(1 + \cos t).$$

(b) Find the points of intersection between the curve

$$\mathbf{r}(t) = t\,\mathbf{i} + \frac{1+t}{t}\,\mathbf{j} + \frac{1-t^2}{t}\,\mathbf{k}$$

and the plane $x - y + 2z + 1 = 0$.

9. Find the unit tangent vector $\mathbf{T}$ and the principal normal vector $\mathbf{N}$ for each of the following curves:

(a) $x = t - t^2/3,\ y = t^2,\ z = t + t^3/3$.
(b) $\mathbf{r}(t) = (3\sin t)\mathbf{i} + (3\cos t)\mathbf{j} + 4t\,\mathbf{k}$.
(c) $\mathbf{r}(t) = (e^t\cos t)\mathbf{i} + (e^t\sin t)\mathbf{j} + 2\,\mathbf{k}$.

10. If $\mathbf{T}$ is the unit tangent vector and $\mathbf{N}$ is the principal unit normal vector for a curve, show that $\mathbf{T} \times \mathbf{N}$ is a unit vector.

11. (a) If $\phi(x, y, z) = xyz + e^{xz}$, find $\nabla \cdot (\nabla \times \nabla\phi)$.
(b) Given $\mathbf{F}(x, y, z) = \ln x\,\mathbf{i} + e^{yz}\,\mathbf{j} + \left(\frac{z}{x}\right)\mathbf{k}$. Find $\nabla \times \mathbf{F}$ and $\nabla \cdot (\nabla \times \mathbf{F})$.
(c) Find the divergence and curl of $\mathbf{F}$ if $\mathbf{F} = e^{xy}\,\mathbf{i} - \cos y\,\mathbf{j} + \sin^2 z\,\mathbf{k}$.
(d) Find the divergence and curl of $\mathbf{F}$ if $\mathbf{F} = \ln x\,\mathbf{i} + e^{xyz}\,\mathbf{j} + \tan^{-1}\left(\frac{z}{x}\right)\mathbf{k}$..

12. (a) Prove that $\nabla \times (\nabla f) = \mathbf{0}$ for any scalar function $f = f(x, y, z)$.
(b) Prove that $\nabla \cdot (\nabla \times \mathbf{F}) = \mathbf{0}$ for any vector functions $\mathbf{F} = f(x, y, z)\mathbf{i} + g(x, y, z)\mathbf{j} + h(x, y, z)\mathbf{k}$.
(c) Prove that $\nabla \times (\nabla \times \mathbf{F}) = \nabla\nabla \cdot \mathbf{F} - \nabla^2\mathbf{F}$ and verify your answers for the function $\mathbf{F} = x^2\,\mathbf{i} + y^2\,\mathbf{j} + z^2\,\mathbf{k}$.

13. (a) Given $T(x, y, z) = \sqrt{x - 3y + 4z}$. Find the direction of the greatest rate of change of T at $P(0, -3, 0)$ and find the rate of change of T in that direction.
(b) Find the direction of the lowest rate of change of $T(x, y, z) = y(x + z)$ at $P(2, 1, -1)$ and give the rate of change in that direction.
(c) The atmospheric temperature is given by $T(x, y, z) = x^2 + y^2 - z$. Calculate the directional derivative of T in the direction $4\,\mathbf{i} + 4\,\mathbf{j} - 2\,\mathbf{k}$ at $(1, 1, 2)$. If a body at $(1, 1, 2)$ is moving toward the point of lowest temperature, find the direction of that body.

14. (a) Find the unit normal vector at $(2, -3, 1)$ to the surface $x^2y - 2yz^2 + x^2y - 3 = 0$.
(b) Find the unit normal vector to the curved surface of the cylinder $x^2 + y^2 = 25$ at $P(3, 2, 4)$.
(c) Find the directional derivative of $\phi = x^2y - zx^2$ at $(1, 2, 1)$ in the direction of $\mathbf{A} = 2\,\mathbf{i} + \mathbf{j} + 2\,\mathbf{k}$.

15. (a) Find the direction of the unit normal vector at $(2, -3, 1)$ to the surface

$$x^2y - 2yz^2 + y^2z - 3 = 0.$$

(b) If $\mathbf{F}(x, y, z) = x^2yz\,\mathbf{i} + xy^2z\,\mathbf{j} + xyz^2\,\mathbf{k}$, find the divergence and curl of $\mathbf{F}$ at $(2, 1, 2)$.

(c) If $f(x, y, z) = (x - y)(y + z)$, find the directional derivative of f at $P(1, 3, 1)$ in the direction of vector $\mathbf{A} = 2\,\mathbf{i} + \mathbf{j} + 2\,\mathbf{k}$.
Also find the direction and value of the maximum rate of change of f at P.

16. A vector whose divergence is zero everywhere is said to be *solenoidal* and a vector whose curl is zero everywhere is said to be *irrotational*.

(a) If ϕ and ψ are differentiable functions, show that $\nabla\phi \times \nabla\psi$ is solenoidal.

(b) If $\mathbf{r} = x\,\mathbf{i} + y\,\mathbf{j} + z\,\mathbf{k}$ and $r = \|\mathbf{r}\|$, show that $\mathbf{r}/r$ is irrotational.

(c) If $\mathbf{F}$ and $\mathbf{G}$ are irrotational, show that $\mathbf{F} \times \mathbf{G}$ is solenoidal.

17. Find ϕ if

(a) $\nabla\phi = (y^2 - 2xyz^3)\mathbf{i} + (3 + 2xy - x^2z^3)\mathbf{j} + (4z^3 - 3x^2yz^2)\mathbf{k}$ and $\phi(1, 1, -1) = 4$.

(b) $\nabla\phi = 2xyz^3\mathbf{i} + x^2z^3\mathbf{j} + 3x^2yz^2\mathbf{k}$ and $\phi(1, -2, 2) = 4$.

18. If $\mathbf{r} = x\,\mathbf{i} + y\,\mathbf{j} + z\,\mathbf{k}$, $r = \|\mathbf{r}\|$, and f is twice differentiable, show that

(a) $\nabla(r) = \dfrac{\mathbf{r}}{r}$.

(b) $\nabla(r^2) = 2\mathbf{r}$.

(c) $\nabla^2 r^n = n(n+1)r^{n-1}$.

(d) $\text{grad div}\left(\dfrac{\mathbf{r}}{r}\right) = -\dfrac{2\mathbf{r}}{r^3}$.

(e) $\nabla \times (f(r)\mathbf{r}) = \mathbf{0}$.

(f) $\nabla^2 f(r) = \dfrac{d^2f}{dr^2} + \dfrac{2}{r}\dfrac{df}{dr}$.

19. Session 2013/14 Sem II

(a) If the velocity of a particle at time t is given by

$$\mathbf{v}(t) = \ln(1 + t)\mathbf{j} - e^{-2t}\mathbf{k}$$

and the initial displacement $\mathbf{r}(0) = 3\mathbf{i} - \mathbf{j}$, find the displacement of the particle at time t. **(8 marks)**

(b) Given that $\phi = x^4yz^2$ and $\mathbf{F} = 2xz^3\mathbf{i} + 3z^2\mathbf{j} + 2xy^3z\mathbf{k}$. Find

(i) $\nabla \times \mathbf{F}$.

(ii) $\nabla \cdot \nabla\phi$.

(5 marks)

(c) Given that

$$\phi(x, y, z) = \left(x + 12 + \frac{9}{x}\right) + \ln y + 2xy^2.$$

Find the directional derivative of $\phi(x, y, z)$ at the point $P(-\sqrt{3}, \frac{1}{2}, 5)$ in the direction of vector $\mathbf{C} = -2\mathbf{i} - \mathbf{j} + 2\mathbf{k}$. Hence determine the minimum rate of change for $\phi(x, y, z)$ at the point P and the direction in which it occurs. **(7 marks)**

20. Session 2014/15 Sem I

(a) Given a scalar field $\phi(x, y, z) = 3x^2 - yz$ and a vector field

$$\mathbf{F}(x, y, z) = 3xyz^2\mathbf{i} + 2xy^3\mathbf{j} - x^2yz\,\mathbf{k}.$$

Find

(i) $\mathbf{F} \cdot \nabla\phi$.

(ii) $\mathbf{F} \times \nabla\phi$.

(iii) $\nabla(\nabla \cdot \mathbf{F})$.

(6 marks)

(b) Given that $\phi(x, y, z) = \ln(x^2 + y^2 + z^2)$ and the point $P(2, 1, 1)$.

(i) Find the directional derivative of ϕ in the direction $\mathbf{i} - 2\mathbf{j} + 2\mathbf{k}$.

(ii) In what directions from the point P for which the directional derivative of ϕ is maximum and minimum.

(iii) Find the magnitude of these maximum and minimum.

(8 marks)

(c) Given that $\mathbf{v}'(t) = \ln t\,\mathbf{i} + e^t\mathbf{j} + 3t\,\mathbf{k}$ and $\mathbf{v}(1) = 4\,\mathbf{i} - 2\,\mathbf{j} + 4\,\mathbf{k}$. Find $\mathbf{v}(t)$. **(6 marks)**

21. Session 2002/03 Sem II

(a) If $\mathbf{F} = x^2y^3z^5\mathbf{i} + \ln(xyz)\mathbf{j} + \sin(xy)\mathbf{k}$, find

(i) $\nabla \cdot \mathbf{F}$.

(ii) $\nabla \times \mathbf{F}$.

(iii) $\nabla\nabla \cdot \mathbf{F}$.

(7 marks)

(b) Given $\mathbf{r}(t) = (e^t \cos t)\mathbf{i} + (e^t \sin t)\mathbf{j} + 2\mathbf{k}$. Find

(i) unit tangent vector $\mathbf{T}$.

(ii) principal unit normal vector $\mathbf{N}$.

(7 marks)

(c) Given $\phi(x, y, z) = x^2 + \frac{1}{4}y^2 + z^2 - 1$.

(i) Find the directional derivative of ϕ in the direction of the vector $\mathbf{A} = 2\,\mathbf{i} + \mathbf{j} + \sqrt{2}\,\mathbf{k}$.

(ii) Determine the direction and the value of maximum change of ϕ at the point $P(\frac{1}{2}, 1, \frac{1}{2}\sqrt{2})$.

(6 marks)

22. Session 2002/03 Sem II

(a) Given that $\phi(x, y, z) = x^2y + z^3xy$, $\mathbf{F} = 2xz^4\mathbf{i} + y^2x\mathbf{j} + xy^5z\mathbf{k}$ and $\mathbf{G} = 2x^3\mathbf{i} + y^3\mathbf{j} + z\mathbf{k}$. Find

(i) $\nabla\phi$.

(ii) $\nabla(\mathbf{G} \cdot \mathbf{F})$.

(iii) $(\mathbf{F} \cdot \nabla)G$.

(7 marks)

(b) The displacement of a particle is given by

$$\mathbf{r}(t) = e^{-2t}(\cos(3t)\mathbf{i} + \sin(3t)\mathbf{j} + 4t\,\mathbf{k}).$$

Find the velocity and acceleration of the particle at any time t. **(5 marks)**

(c) The temperature $T(x, y, z)$ at any point (x, y, z) is given by

$$T(x, y, z) = \frac{12}{1 - x^2 + 4y^2 - 3z^3}.$$

(i) Find the directional derivative of $T(x, y, z)$ in the direction of the vector $\mathbf{P} = 2\,\mathbf{i} + \mathbf{j} + 3\,\mathbf{k}$ at $A(1, 0, 2)$.

(ii) Determine the direction and the value of maximum change of $T(x, y, z)$ at $A(1, 0, 2)$. **(8 marks)**

23. Session 2005/06 Sem I

(a) Find the directional derivative of the scalar field $\phi(x, y, z) = x^2 \sin(yz)$ at the point $(\sqrt{3}, \frac{\pi}{6}, 2)$ in the direction of the vector $\mathbf{v} = \mathbf{i} - 2\,\mathbf{j} + 2\,\mathbf{k}$. **(8 marks)**

(b) Let $\mathbf{r} = x\,\mathbf{i} + y\,\mathbf{j} + \mathbf{k}$ and it's magnitude is r. Show that $\nabla r = \dfrac{\mathbf{r}}{r}$. **(4 marks)**

(c) Let $\mathbf{F} = x^2yz\,\mathbf{i} + xy^2z\,\mathbf{j} + xyz^2\mathbf{k}$. Find

(i) $\nabla \cdot \mathbf{F}$.

(ii) $\nabla(\nabla \cdot \mathbf{F})$.

(iii) $\nabla \times [\nabla(\nabla \cdot \mathbf{F})]$.

(8 marks)

24. Session 2006/07 Sem I

(a) The position vctor of a particle is given by $\mathbf{r}(t) = a\cos t\,\mathbf{i} + a\sin t\,\mathbf{j} + bt\,\mathbf{k}$, where a and b are constants. Show that:

(i) the unit tangent $\mathbf{T} = \dfrac{1}{\sqrt{a^2 + b^2}}(-a\sin t\,\mathbf{i} + a\cos t\,\mathbf{j} + b\,\mathbf{k})$.

(ii) the principal unit normal $\mathbf{N} = -\cos t\,\mathbf{i} - \sin t\,\mathbf{j}$.

(6 marks)

(b) Given that $\mathbf{F} = x^2z\,\mathbf{i} - 2yz\,\mathbf{j} + x^2yz\,\mathbf{k}$ and $\phi(x, y, z) = x^2yz$. Find

(i) grad ϕ.

(ii) div $\mathbf{F}$.

(iii) $\nabla \times (\nabla\phi)$.

(7 marks)

(c) The temperature in degree celcius, $T(x, y, z)$ at any point (x, y, z) in a metal solid is given by

$$T(x; y; z) = \frac{xyz}{1 + x^2 + y^2 + z^2}.$$

Find the rate at which the temperature rises most rapidly at the point $(1, 1, 1)$ and the direction of this maximum increase. **(7 marks)**

25. Session 2007/08 Sem II

(a) If $f(x, y, z) = xy^2z$, determine

(i) ∇f.

(ii) curl grad f.

(iii) div grad f.

(7 marks)

(b) Suppose a particle moves counter-clockwise around the circle with centre $(0,0)$ and radius 2 at a constant speed. If its initial position is $(2,0)$, find the position vector $\mathbf{r}$. Show that the acceleration a of the particle is directed opposite of $\mathbf{r}$. **(6 marks)**

(c) Let $f(x,y,z) = \dfrac{y}{x+z}$.

(i) Find the directional derivative of $f(x,y,z)$ at the point $P(2,1,-1)$ in the direction from P to a point $Q(-1,2,0)$.

(ii) Determine the direction of minimum rate of change of $f(x,y,z)$ at the point $P(2,1,-1)$. Express your answer as unit vector.

(7 marks)

26. Session 2008/09 Sem I

(a) Given the vector field $\mathbf{F} = y\ln x\,\mathbf{i} + 2z\ln y\,\mathbf{j} - 3x\sin z\,\mathbf{k}$. Find

(i) $\nabla\cdot\mathbf{F}$.

(ii) $\nabla\times\mathbf{F}$.

(iii) $\nabla(\nabla\cdot\mathbf{F})$.

(6 marks)

(b) A curve in three dimensional space is represented by following parametric equations:

$$x = e^t\cos t,\quad y = e^t\sin 3t \quad\text{and}\quad z = 5e^t.$$

Find the unit tangent vector, $\mathbf{T}$ and the principal unit normal $\mathbf{N}$. **(7 marks)**

(c) Given the scalar field

$$\phi(x,y,z) = x^2y + 2yz^2.$$

Find the directional derivative of $\phi(x,y,z)$ at the point $Q(1,-1,1)$ in the direction of $\mathbf{a} = -2\,\mathbf{i} - \mathbf{j} + 2\,\mathbf{k}$. Hence obtain the direction and the maximum change of $\phi(x,y,z)$ at the point Q. **(7 marks)**

27. Session 2008/09 Sem II

(a) Given the vector field $\mathbf{F} = \cos x\,\mathbf{i} + \sin z\,\mathbf{j} + z\,\mathbf{k}$. Determine

(i) $\nabla\cdot\mathbf{F}$. **(2 marks)**

(ii) $\nabla\times\mathbf{F}$. **(3 marks)**

(iii) $\nabla(\nabla\cdot\mathbf{F})$. **(2 marks)**

(b) An object moves in space with acceleration

$$\mathbf{a}(t) = -t\,\mathbf{i} + 2\,\mathbf{j} + (2-t)\mathbf{k}.$$

When $t=0$, the object is at the point $(1,0,0)$ with velocity $\mathbf{v}(0) = 2\,\mathbf{i} - 4\,\mathbf{j}$.

(i) Find the velocity $\mathbf{v}(t)$ and the position vector $\mathbf{r}(t)$. **(5 marks)**

(ii) What is the speed and the direction of motion when $t=1$.

(c) The greatest rate of change of a function $f(x,y,z)$ at a point P in the direction of $\mathbf{v} = \mathbf{i} + \mathbf{j} - \mathbf{k}$ is $2\sqrt{3}$. Find ∇f at P. **(5 marks)**

ANSWERS TO TUTORIAL 3

1. (a)

$$\mathbf{r}(0) = 4\,\mathbf{j}$$
$$\mathbf{r}(1) = \mathbf{i} + 6\,\mathbf{j}$$
$$\mathbf{r}(2) = \sqrt{2}\,\mathbf{i} + 8\,\mathbf{j}$$

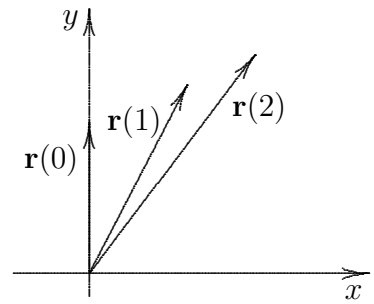

(b)

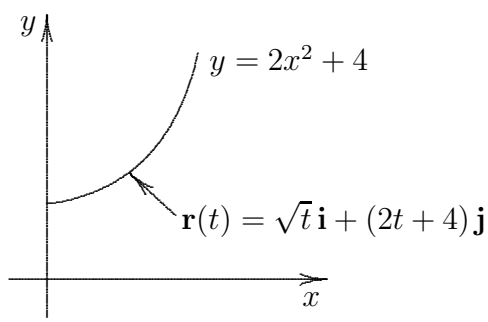

(c) $\mathbf{T} = \dfrac{1}{\sqrt{17}}\,\mathbf{i} + \dfrac{4}{\sqrt{17}}\,\mathbf{j}$

2. (a)

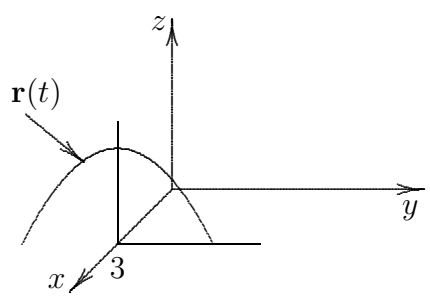

$\mathbf{r}'(1) = \mathbf{j} - 2\,\mathbf{k}$

(b)

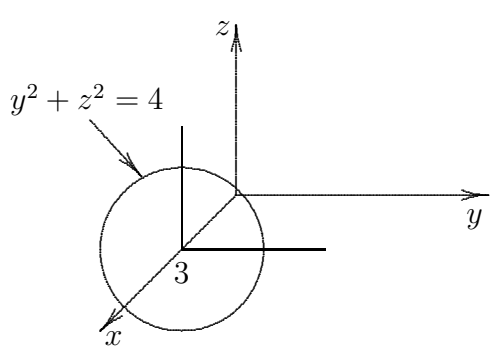

$\mathbf{r}'(\pi/2) = -2\,\mathbf{j}$

(c)

$\mathbf{r}'(\pi) = 4\,\mathbf{j}$

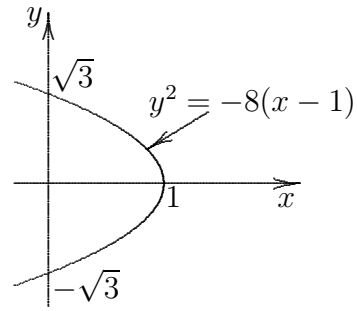

3. (a) $\mathbf{r}'(t) = \mathbf{j}, \;\; \mathbf{r}''(t) = \mathbf{0}$

(b) $\mathbf{r}'(t) = -a\sin t\,\mathbf{i} + b\cos t\,\mathbf{j}, \;\; \mathbf{r}''(t) = -a\cos t\,\mathbf{i} - b\sin t\,\mathbf{j}$

(c) $\mathbf{r}'(\theta) = (1-\cos\theta)\,\mathbf{i} + \sin\theta\,\mathbf{j}, \;\; \mathbf{r}''(\theta) = \sin\theta\,\mathbf{i} + \cos\theta\,\mathbf{j}$

4. (a) $\mathbf{v} = \mathbf{i} + 2\,\mathbf{j}, \;\; |\mathbf{v}| = \sqrt{5}$

$\mathbf{a} = \mathbf{0}, \;\; |\mathbf{a}| = 0$

(b) $\mathbf{v} = e^t\,\mathbf{i} + \dfrac{e^{t/2}}{2}\,\mathbf{j}, \;\; |\mathbf{v}| = \dfrac{\sqrt{4e^{2t}} + e^t}{2}$

$\mathbf{a} = e^t\,\mathbf{i} + \dfrac{e^{t/2}}{4}\,\mathbf{j}, \;\; |\mathbf{a}| = \dfrac{\sqrt{16e^{2t} + e^t}}{4}$

(c) $\mathbf{v} = \cos\theta\,\mathbf{i} - 2\sin 2\theta\,\mathbf{j}, \;\; |\mathbf{v}| = \left(\sqrt{1 + 16\sin^2\theta}\right)\cos\theta$

$\mathbf{a} = -\sin\theta\,\mathbf{i} - 4\cos 2\theta\,\mathbf{j}, \;\; |\mathbf{a}| = \sqrt{\sin^2\theta + 16\cos^2 2\theta}$

5. (a) $\mathbf{r}(t) = 2e^{2t}\,\mathbf{i} + 3\left(e^t - 1\right)\,\mathbf{j}$

(b) $\mathbf{r}(t) = 600\sqrt{3}t\,\mathbf{i} + \left(600t - 16t^2\right)\,\mathbf{j}$

6. (a) $\mathbf{T} = \dfrac{1}{\sqrt{26}}(\,\mathbf{i} + 4\,\mathbf{j} - 3\,\mathbf{k}), \;\; \mathbf{N} = \dfrac{1}{5\sqrt{2}}(4\,\mathbf{j} - 6\,\mathbf{k})$

(b) $\mathbf{T} = \dfrac{1}{\sqrt{3}}(\,\mathbf{i} + \,\mathbf{j} + \,\mathbf{k}), \;\; \mathbf{N} = \dfrac{1}{\sqrt{5}}(2\,\mathbf{j} + \,\mathbf{k})$

(c) $\mathbf{T} = \dfrac{1}{\sqrt{13}}(\sqrt{3}\,\mathbf{i} - \,\mathbf{j} + 3\,\mathbf{k}), \;\; \mathbf{N} = -\dfrac{1}{2}(\,\mathbf{i} + \sqrt{3}\,\mathbf{j})$

7. (a) $\dfrac{d}{dt}\left[\mathbf{F}(t) \times \mathbf{G}(t)\right] = (\sin t + t\cos t)\,\mathbf{i} + (\tan^2 t + 4\ln t + 3)\,\mathbf{j} - 8t\,\mathbf{k}$

(b) $\dfrac{d}{dt}\left[\mathbf{F}(t) \cdot \mathbf{G}(t)\right] = 7t^6$

(c) $\mathbf{r}(t) = 2(t-1)\,\mathbf{i} + \dfrac{1}{2}\left[\ln(t^2+1) - \ln 2\right]\,\mathbf{j} + \dfrac{1}{2}(t^2 - 1)\,\mathbf{k})$

8. (b) $(-1, 0, 0)$ and $(1, 2, 0)$

9. (a) $\mathbf{T} = \dfrac{(1-t^2)\mathbf{i} + 2t\,\mathbf{j} + (1+t^2)\mathbf{k}}{\sqrt{2}(1+t^2)}, \quad \mathbf{N} = \dfrac{-2t}{1+t^2}\mathbf{i} + \dfrac{1-t^2}{1+t^2}\mathbf{j}.$

(b) $\mathbf{T} = \dfrac{(3\cos t)\mathbf{i} - (3\sin t)\mathbf{j} + 4\,\mathbf{k}}{5}, \quad \mathbf{N} = (-\sin t)\mathbf{i} - (\cos t)\mathbf{j}.$

(c) $\mathbf{T} = \dfrac{(\cos t - \sin t)\mathbf{i} + (\sin t + \cos t)\mathbf{j}}{\sqrt{2}} \quad \mathbf{N} = \dfrac{(-\sin t - \cos t)\mathbf{i} + (\cos t - \sin t)\mathbf{j}}{\sqrt{2}}.$

11. (a) $\nabla \cdot (\nabla \times \nabla\phi) = 0$

(b) $\nabla \times \mathbf{F} = -ye^{yz}\,\mathbf{i} + \dfrac{z}{x^2}\,\mathbf{j}, \;\; \nabla \cdot (\nabla \times \mathbf{F}) = 0$

(c) Divergence $\mathbf{F} = ye^{xy} + \sin y + 2\sin z\,\cos z$

Curl $\mathbf{F} = -xe^{xy}\,\mathbf{k}$

(d) Divergence $\mathbf{F} = \dfrac{1}{x} + xze^{xyz} + \dfrac{x}{x^2+z^2},$

Curl $\mathbf{F} = -xye^{xyz}\,\mathbf{i} + \dfrac{z}{x^2+z^2}\,\mathbf{j} + yze^{xyz}\,\mathbf{k}$

13. (a) The direction of the greatest changing: $\dfrac{1}{6}\,\mathbf{i} - \dfrac{1}{2}\,\mathbf{j} + \dfrac{2}{3}\,\mathbf{k}$

Maximum rate of change: $\dfrac{1}{6}\sqrt{26}$

(b) The direction of the smallest changing: $-\,\mathbf{i} - \mathbf{j} - \mathbf{k}$

Minimum rate of change: $-\sqrt{3}$

(c) Directional derivative: 3

The direction of the movement: $\dfrac{2}{3}\,\mathbf{i} + \dfrac{2}{3}\,\mathbf{j} - \dfrac{1}{3}\,\mathbf{k}$

14. (a) $\mathbf{n} = \dfrac{1}{3}(2\,\mathbf{i} - \mathbf{j} + 2\,\mathbf{k})$

(b) $\mathbf{n} = \dfrac{1}{5}(3\,\mathbf{i} + 4\,\mathbf{k})$

(c) Directional derivative: 1

15. (a) $\mathbf{n} = \dfrac{1}{\sqrt{601}}(-12\,\mathbf{i} - 4\,\mathbf{j} + 21\,\mathbf{k})$

(b) Divergence $\mathbf{F} = 24$. Curl $\mathbf{F} = 6(\,\mathbf{i} - \,\mathbf{k})$

(c) Directional derivative: $-\dfrac{2}{3}$. Direction: $2(2\mathbf{i} - 3\,\mathbf{j} - \,\mathbf{k})$

Maximum value: $2\sqrt{14}$

17. (a) $\phi(x,y,z) = xy^2 - x^2yz^3 + 3y + z^4 - 2.$ (b) $\phi(x,y,z) = x^2yz^3 + 20.$

19. (a) $\mathbf{r}(t) = 3\mathbf{i} + \big((t+1)\ln(t+1) - t - 1\big)\mathbf{j} + \Big(\dfrac{1}{2}e^{-2t} - \dfrac{1}{2}\Big)\mathbf{k}.$

(b) (i) $\nabla \times \mathbf{F} = (6xy^2z - 6z)\mathbf{i} + (6xz^2 - 2y^3z)\mathbf{j}.$

(ii) $\nabla \cdot \nabla\phi = 12x^2yz^3 + 2x^4y.$

(c) $D_{\mathbf{u}}\phi = -\frac{7}{3}.$

Minimum rate of change of ϕ at P is $-\frac{1}{2}\sqrt{593}.$

Direction of minimum rate of change of ϕ at P is $2\,\mathbf{i} - 12\,\mathbf{j} - \frac{1}{2}\,\mathbf{k}.$

20. (a) (i) $18x^2yz^2 - 2xy^3z + x^2y^2z$.

(ii) $-(2xy^4 + x^2yz)\mathbf{i} + (3xy^2z^2 - 6x^3yz)\mathbf{j} - (3xyz^3 + 12x^2y^3)\mathbf{k}$.

(iii) $(6y^2 - 2xy)\mathbf{i} + (3z^2 + 12xy - x^2)\mathbf{j} + (6yz)\mathbf{k}$.

(b) (i) $D_{\mathbf{u}}\phi = \dfrac{2}{9}$.

(ii) Direction of maximum directional derivative is $\dfrac{1}{3}\Big(2\,\mathbf{i} + \mathbf{j} + \mathbf{k}\Big)$.

Direction of minimum directional derivative is $-\dfrac{1}{3}\Big(2\,\mathbf{i} + \mathbf{j} + \mathbf{k}\Big)$.

(iii) Magnitude of maximum directional derivative is $\dfrac{1}{3}\sqrt{6}$.

Magnitude of minimum directional derivative is $-\dfrac{1}{3}\sqrt{6}$.

(c) $\mathbf{v}(t) = (t\ln t - t + 5)\mathbf{i} + (e^t - 2 - e)\mathbf{j} + \frac{1}{2}(3t^2 + 5)\mathbf{k}$.

21. (a) (i) $2xy^3z^5 + \dfrac{1}{y}$

(ii) $\Big(x\cos(xy) - \dfrac{1}{z}\Big)\mathbf{i} + (5x^2y^3z^4 - y\cos(xy))\mathbf{j} + \Big(\dfrac{1}{x} - 3x^2y^2z^5\Big)\mathbf{k}$

(iii) $2y^3z^5\mathbf{i} + \Big(6xy^2z^5 - \dfrac{1}{y^2}\Big)\mathbf{j} + 10xy^3z^4\mathbf{k}$

(b) (i) $\mathbf{T} = \dfrac{1}{\sqrt{2}}[(\cos t - \sin t)\mathbf{i} + (\sin t + \cos t)\mathbf{j}]$

(ii) $\mathbf{N} = \dfrac{1}{\sqrt{2}}[-(\cos t + \sin t)\mathbf{i} + (\cos t - \sin t)\mathbf{j}]$

(c) (i) The directional derivative: $\dfrac{9}{2\sqrt{7}}$

(ii) Maximum rate of change: $\dfrac{\sqrt{13}}{2}$

The direction of the greatest change: $\mathbf{i} + \dfrac{1}{2}\mathbf{j} + \sqrt{2}\,\mathbf{k}$

22. (a) (i) $(2xy + z^3y)\mathbf{i} + (x^2 + z^3x)\mathbf{j} + (3z^2xy)\mathbf{k}$

(ii) $(16x^3z^4 + y^5 + y^5z^2)\mathbf{i} + (5y^4x + 5xy^4z^2)\mathbf{j} + (16x^4z^3 + 2xy^5z)\mathbf{k}$

(iii) $12x^3z^4\mathbf{i} + 3y^4x\mathbf{j} + xy^5z\mathbf{k}$

(b) $\mathbf{v} = e^{-2t}[-(2\cos(3t) + 3\sin(3t))\mathbf{i} - (2\sin(3t) - 3\cos(3t))\mathbf{j} - (8t - 4)\mathbf{k}]$

$\mathbf{a} = e^{-2t}[(-5\cos(3t) + 12\sin(3t))\mathbf{i} - (12\cos(3t) + 5\sin(3t))\mathbf{j} + (16t - 6)\mathbf{k}]$

(c) (i) The directional derivative: 0.6236

(ii) Maximum rate of change: 0.7512

The direction of the greatest change: $\dfrac{1}{24}\mathbf{i} + \dfrac{3}{4}\mathbf{k}$

23. (a) (i) The directional derivative: $\dfrac{\pi}{6} - 1$

(c) (i) $6xyz$ (ii) $(6yz)\mathbf{i} + (6xz)\mathbf{j} + (6xy)\mathbf{k}$ (iii) $0\mathbf{i} + 0\mathbf{j} + 0\mathbf{k} = \mathbf{0}$

24. (b) (i) $2xyz\mathbf{i} + x^2z\mathbf{j} + x^2y\mathbf{k}$ (ii) $2xz - 2z + x^2y$ (iii) $\mathbf{i} + \mathbf{j} + \mathbf{k}$

(c) Maximum rate of change: $\dfrac{\sqrt{3}}{8}$

The direction of the greatest changing: $\mathbf{i} + \mathbf{j} + \mathbf{k}$

25. (a) (i) $\mathbf{i} + \mathbf{j} + \mathbf{k}$ (ii) $0\,\mathbf{i} + 0\,\mathbf{j} + 0\,\mathbf{k} = \mathbf{0}$ (iii) $2xz$

(b) $\mathbf{r} = 2\cos t\,\mathbf{i} + 2\sin t\,\mathbf{j} + \mathbf{k}$ (ii) $\mathbf{a} = -2\cos t\,\mathbf{i} - 2\sin t\,\mathbf{j}$

(c) (i) The directional derivative: $\dfrac{3}{\sqrt{11}}$

(ii) Minimum rate of change: $-\sqrt{3}$

The direction of the minimum change: $\dfrac{1}{\sqrt{3}}[\mathbf{i} - \mathbf{j} + \mathbf{k}]$

26. (a) (i) $\dfrac{y}{x} + \dfrac{2z}{y} - 3x\cos z$

(ii) $-2\ln y\,\mathbf{i} + 3\sin z\,\mathbf{j} - \ln x\,\mathbf{k}$

(iii) $\Big(-\dfrac{y}{x^2} - 3\cos z\Big)\mathbf{i} + \Big(\dfrac{1}{x} - \dfrac{2z}{y^2}\Big)\mathbf{j} + \Big(\dfrac{2}{y} + 3x\sin z\Big)\mathbf{k}$

(b) $\mathbf{T} = \dfrac{1}{\sqrt{35}}[(\cos(3t) - 3\sin(3t))\mathbf{i} + (\sin(3t) + 3\cos(3t))\mathbf{j} + 5\,\mathbf{k}]$

$\mathbf{N} = \dfrac{1}{\sqrt{10}}[(\cos(3t) - 3\sin(3t))\mathbf{i} + (\cos(3t) - 3\sin(3t))\mathbf{j}]$

(c) (i) The directional derivative: $-\dfrac{7}{3}$

(ii) Maximum rate of change: $\sqrt{29}$

The direction of the greatest change: $-2\,\mathbf{i} + 3\,\mathbf{j} - 4\,\mathbf{k}$

27. (a) (i) $-\sin x + 1$

(ii) $\cos x\,\mathbf{k}$

(iii) $-\cos x\,\mathbf{i}$

(b) $\mathbf{v}(t) = \Big(-\dfrac{t^2}{2} + 2\Big)\mathbf{i} + (2t - 4)\,\mathbf{j} + \Big(2t - \dfrac{t^2}{2}\Big)\mathbf{k}$

$\mathbf{r}(t) = \Big(-\dfrac{t^3}{6} + 2t + 1\Big)\mathbf{i} + (t^2 - 4t)\mathbf{j} + \Big(t^2 - \dfrac{t^3}{6}\Big) + \mathbf{k}$

Speed: $\dfrac{\sqrt{34}}{2}$

Direction of motion: $\dfrac{1}{\sqrt{34}}(3\,\mathbf{i} - 4\,\mathbf{j} + 3\,\mathbf{k})$

(c) The gradient of $f(x, y, z)$: $\nabla f = -2\,\mathbf{i} + 2\,\mathbf{j} - 2\,\mathbf{k}$